THE ELECTRICITY COMMISSION OF NEW SOUTH WALES and its place in the rise of centralised coordination of bulk electricity generation and transmission 1888 - 2003

Kenneth David Thornton

Bachelor of Arts (UNE).

Graduate Certificate Human Resource Management (Charles Sturt)

Doctor of Philosophy (History)
School of Humanities and Social Science

2015

Cover image: Electricity Commission of New South Wales Logo – October 1960 (ECNSW 02848)

The thesis contains no material which has been accepted for the award of any other degree or diploma in any university or other tertiary institution and, to the best of my knowledge and belief, contains no material previously published or written by another person, except where due reference has been made in the text. I give consent to the final version of my thesis being made available worldwide when deposited in the University's Digital Repository**, subject to the provisions of the Copyright Act 1968. **Unless an Embargo has been approved for a determined period.

(Signed)

Kenneth David Thornton

Acknowledgments

I wish to acknowledge the following people and organisations for their invaluable help.

First, research would have been extremely difficult, if not impossible to complete, without the assistance of my former employer, Eraring Energy. In particular, Managing Director, Peter Jackson, for allowing me to use the facilities at Eraring Power Station even though I had retired. Corporate Information Managers, Joanne Golding and Daniel Smith for providing access to a wealth of primary sources and for not complaining when I commandeered a corner of their work area to further my research.

Many former colleagues of the Electricity Commission of New South Wales, Pacific Power and Eraring Energy, who gave of their time and expertise in the form of answering questionnaires or actual interviews. In particular, Kathryn Coates, for suggesting I combine an unused, at least for academic research, primary resource, a fascination with power engineering technologies, and a love of history.

Former Electricity Commission of New South Wales Vice-Chairman, Chairman, and General Manager, Frank Brady, for his invaluable oral history interviews for the Institute of Engineers Australia. After a four-decade career with the Electricity Commission of New South Wales, Frank, not this author, is the more qualified to write this history.

A number of organisations have provided valuable assistance. TransGrid and Macquarie Generation for assisting in my quest for participants willing to answer questionnaires or be interviewed. Energy Australia (Sydney County Council) and the New South Wales Department of Public Works for providing access to their Annual Reports.

State Records Authority of New South Wales for permission to use images from the Photographic Collection of the Electricity Commission of NSW / Pacific Power 1950-94 (NRS 20347).

To members of the First Wednesday Ph.D. Coffee Club, Jan, Ann, Rob, Johanna, Brian, Jude and Bob. While we are travelling the same word hermit's path, the subject matter may be different, but the research and writing issues are the same.

Special thanks to Wayne Reynolds and James Bennett, my academic supervisors, for helping me find and apply the rigour needed for academic research and writing; for being accessible, and for their encouragement.

Last but certainly not least, my family. To my son, Matthew, the musician, for helping place it all in perspective. To Louise, my daughter, who travelled the Ph.D. road two years before me for providing encouragement. To my wife, Kathryn, my greatest supporter, for love, encouragement, and for not complaining too much about my lack of action in addressing the 'to do list' on the refrigerator.

Ken Thornton

Rathmines
January 2015

Editorial Notes

This thesis has been written and formatted in accordance the 'Chicago' bibliographic conventions as outlined in Kate L Turabian, *A Manual for Writers of Term Papers, Theses, and Dissertations* (Chicago: University of Chicago Press, 8th edition, 2013). However, the University of Newcastle, School of Humanities, History Department prefers the use the short form of reference for consecutive reference to the same work. The use of 'ibid' is not encouraged.

Non-bibliographical conventions such as capitalisation and hyphenation are guided by the Commonwealth of Australia's *Style Manual for Authors, Editors and Printers* (Canberra: John Wiley & Sons, 6th edition, 2002), and the *Macquarie Encyclopedic Dictionary*, (Sydney: Heritage Publishing. Signature Edition. 2011)

Contents

Table of Figures

Glossary

AC	Alternating Current
AAEC	Australian Atomic Energy Commission
AEDP	Accelerated Electricity Development Program
AEMO	Australian Energy Market Operator
ALP	Australian Labor Party
APESMA	Association of Professional Engineers, Scientists and Managers Australia
APPO	Assistant Power Plant Operator
BEA	British Electricity Authority
BST	Bulk Supply Tariff
CBD	Central Business District
CEGB	Central Electricity Generating Board
CFMEU	Construction, Forestry, Mining and Energy Union
DC	Direct Current
ECNSW	Electricity Commission of New South Wales
ECNZ	Electricity Corporation of New Zealand
EIS	Environmental Impact Statements
ELEX	Electricity Exchange
ELPSC	Electric Light and Power Supply Corporation
ESAA	Electricity Supply Association of Australia
ESI	Electricity Supply Industry
ETSA	Electricity Trust of South Australia
GTE	Government Trading Enterprises
HEC	Hydro-Electricity Commission
HED	Hydro-Electricity Department
HV	High Voltage
HZ	Hertz (frequency)
kV	Kilovolt (1000 volts)
KWh	Kilowatt-hour
MW	Megawatt
MWh	Megawatt-hour
NEM	National Electricity Market
NEMMCO	National Electricity Market Management Company
NSW	New South Wales
NSWGR	NSW Government Railways
NZED	New Zealand Electricity Division
PF	Pulverised fuel firing
PP	Pacific Power
PPI	Pacific Power International
PWD	Public Works Department
QEC	Queensland Electricity Commission
SCC	Sydney County Council
SECV	State Electricity Commission of Victoria
SEM	State Electricity Market
SMC	Sydney Municipal Council
SMH	Sydney Morning Herald
SMHA	Snowy Mountain Hydro-electric Authority

SOC	State Owned Corporation
SOE	State Owned Enterprise
SPCC	State Pollution Control Commission
SRA	State Rail Authority
TEAM	Training Efficiency and Multi-skilling
TQM	Total Quality Management
UNSW	University of New South Wales

Abstract

Between 1950 and 1995, the Electricity Commission of New South Wales had a virtual monopoly on the generation and transmission of bulk electricity within New South Wales. Created as a single public statewide generation and transmission utility, the Electricity Commission rectified a fragmented generation industry's failure to resolve the severe power restriction and blackouts following World War Two.

The main theme of this thesis is the transformation of the pre-1950 fragmented New South Wales electricity generation and transmission industry into a coordinated industry in which reliability of supply was paramount. The discussion focuses on the interconnection of high voltage networks, and the rise of coordinated control of the industry from small isolated power stations, through large uncoordinated systems, a statewide coordinated system to the interconnection with similar coordinated interstate systems. As electricity generating and transmission technologies are a major contributor to industrial, commercial and residential prosperity, the interplay between society and technology features in the discussion. While the contributions of a small number of senior public servants and politicians are discussed, this does not diminish the contribution of the thousands of industry employees both past and present.

The study concludes that the Electricity Commission's ability to remain at the centre of the New South Wales energy industry was based on being able to provide a reliable supply. Political expediency created the organisation in 1950; technology sustained it, and in the mid to late 1990s, despite a history of the provision of a reliable supply, it was political expediency that hastened its demise. The organisation's status as being Australia's largest electricity generating utility for much of the second half of the twentieth century did not ensure its continued existence in the liberalised, competitive, national electricity market of the twenty-first.

Chapter 1 Introduction.

Introduction

Monday, 22 May 1950, is a significant day in the power engineering history of New South Wales (NSW). On that day, the NSW Labor government established the Electricity Commission of New South Wales (ECNSW). In turn, the organisation launched a series of initiatives that resolved the severe power restrictions and blackouts that had plagued the state since the end of the Second World War. Five decades later in January 2003 another NSW Labor government, as part of its electricity industry reform policies, disbanded the Electricity Commission's direct successor Pacific Power.[1] For most of the intervening years, the ECNSW had an effective monopoly on the generation and transmission of bulk high voltage electricity within the state.

This study is principally a socio-technology grounded analysis of the NSW electricity generation industry in the twentieth century.[2] It explores the establishment, development and dissolution of the ECNSW / Pacific Power through an examination of social and technical factors influencing NSW's evolving generation and transmission system structures. The first of the five key areas to be investigated is the industry's operational structures evident in the twentieth century. Second, the social factors influencing the magnitude and rate of change of demand for electricity from 1950 to 2003. Third, the extent that the demand for electricity influenced the ECNSW's power station and transmission line construction program, its management and operational activities. Fourth, the role the NSW Government played in the development and operation of the industry in general and the ECNSW/Pacific Power in particular. Finally, the extent to

---

[1] The Electricity Commission of New South Wales, established in 1950, changed its trading name to Pacific Power in 1992.

[2] The study of the history of interrelationship between society and technology is perhaps best defined by the Society for the History of Technology as the "historical study of technology and its relations with politics, economics, labour, business, the environment, public policy, science, and the arts." "About Us." Society for the History of Technology, http://www.historyoftechnology.org/about_us/index.html. [Accessed 14 August 2014]

which the structure of the NSW industry differed to comparable Australian and international jurisdictions.

Drawing on the findings of the above questions, the study explores the importance of ensuring adequate generating capacity is available to meet demand and the significance of network interconnections in the development of large scale electricity networks. For a public electricity utility tasked by the government to generate bulk electricity, the reliability of supply is inexorably linked to the achievement of this primary goal. Accordingly, the organisation's ability to ensure reliability of supply is examined in relation to the nature of the demand for electricity, the technical and operational activities undertaken to meet that demand, and the manner in which the organisation resolved problems or critical issues that had the potential to hinder the achievement of that goal. With the production of an adequate supply of electricity as a core organisational goal, the study explores the foundations of the ECNSW/ Pacific Power's ability to remain at the centre of the NSW electricity industry from its formation in 1950 to the mid-1990s. Importantly, the study also explores why the organisation no longer occupied that position in the mid-1990s and why by 2003 it ceased to exist. In an industry dominated by the development, management and operation of technology, energy politics have often been at the forefront. The study explores when one or the other has been prominent and, if so, has it been to the detriment of the other. Equally important yet often overlooked, is that the production of bulk electricity is not carried out by amorphous public and private organisations. Politicians, managers, engineers, technicians, tradespeople, plant operators and a host of others were involved in different eras and at various stages in the process. While it would be impossible to examine the role of each individual or even each profession or trade grouping, it is nevertheless appropriate to acknowledge the role and contribution a number of key people made to the development and operation of the industry.

The importance of the provision of electricity to society is best evidenced when it is not available. Power restrictions and blackouts hinder a wide range of society's activities including the stoppage of industrial production, restrictions to public transport, curtailment of public and private entertainment, and the defrosting of frozen food or a morning cup of coffee not prepared. Consequently, organisations that generate electricity,

while largely unfamiliar to the public are significant contributors to the prosperity, comfort and security of society. In the case of the Electricity Commission, even if meeting the 4,500 per cent increase in electricity sales, or a 2,300 per cent increase in system peak demand in the period 1952 – 1994 were the organisation's only contribution to NSW it remains surprising that a history of the organisation has not been written.[3]

Electricity in New South Wales: forgotten history and taken for granted

In the final decade of Pacific Power, with the exception of a number of industry commentators including Rix, Johnson and Booth, politicians, the media, and the public gave little, if any, thought to the history of the NSW industry.[4] A similar unfamiliarity appeared evident in the early 1950s as the generating assets of the state's four major electricity authorities were transferred to the newly formed Electricity Commission. For many in the community in the early 1950s, there was an expectation of improved reliability of supply. By the time of Pacific Power's dissolution in 2003, reliability of supply had become the norm and taken for granted.

Many in the community are equally unfamiliar with the requirement that alternating current (AC) electricity must be consumed as it is generated. Thus, its production and transmission are firmly positioned in the present. Rarely do those people who produce

---

[3] *Annual Reports of the Electricity Commission of New South Wales / Pacific Power*: 1953 - 2000.

[4] Stephen Rix and Michael R. Johnson, *Powering the Future : the electricity industry and Australia's energy future* (Sydney: Pluto Press Australia in association with the Public Sector Research Centre, University of New South Wales, 1991). Robert R. Booth, *Warring tribes - The Story of Power Development in Australia* (Perth: Bardak Group, 2000). Evidence of a forgotten organisational history are the, at best, currsory references made during the parliamentary debates on the organisation's dissolution. New South Wales, *Parliamentary Debates*, "Pacific Power (Dissolution) Bill," Legislative Council, 26 June 2003, (Michael Egan, Treasurer); New South Wales, *Parliamentary Debates*, "Pacific Power (Dissolution) Bill," Legislative Council, 26 June 2003, (D.J. Gay, Deputy Leader of the Opposition); New South Wales, *Parliamentary Debates*, "Pacific Power (Dissolution) Bill," Legislative Assembly, 17 June 2003, (J. Hunter, Australian Labor Party); New South Wales, *Parliamentary Debates*, "Pacific Power (Dissolution) Bill," Legislative Council, 26 June 2003, (L. Rhiannon, Australian Greens); New South Wales, *Parliamentary Debates*, "Pacific Power (Dissolution) Bill," Legislative Assembly, 17 June 2003, (G West, Parliamentary Secretary).

electricity on a minute-to-minute basis consider the political aspects of what they are doing. They are more concerned with steam temperatures, bearing vibrations, reactive power levels, and a host of other critical production indicators. However, with the introduction of a competitive electricity supply environment in the late 1990s, the economic consequences of their actions to their employer often assumes increasing importance alongside steam temperatures and bearing vibrations. Accordingly, while politics, economics and societal issues, critical as they undoubtedly are and feature heavily, this study has an equal focus on technology.

In the debates on how to reduce carbon emissions or privatisation of electricity assets in the early twenty-first century, the small isolated electricity generating plants of the late nineteenth century are largely forgotten. Overlooked are the metropolitan power stations that contributed to Sydney's electricity supply up to the 1970s and early 1980s. In condemning rising electricity prices, consumers in the early decades of the twenty-first century, are unaware of or have forgotten, the years of declining electricity prices in the 1950s and 1960s.[5]

Twelve years after Pacific Power, a "resource hungry, technically advanced, politically powerful, and … remote" statutory authority was dissolved its legacy continues to exert an influence on the political, economic, and power engineering landscape of NSW.[6] Furthermore, the power stations acquired by the ECNSW from its predecessors plus those it commissioned are significant to NSW's industrial heritage. While many no longer

---

[5] Ross Gittins, "Privatisation and power prices", *Sydney Morning Herald*, 15 July 2014. Nicole Hasham, Brian Robins, and Jacob Saulwick, "Cheaper electricity promised as NSW government lifts price controls", *Sydney Morning Herald*, 7 April 2014. Peter Hannam and Mark Kenny, "Lower bills won't happen, say experts", *Sydney Morning Herald*, 17 October 2013. Tom Arup, "Households face higher power bills by 2020 if renewable energy target is scrapped, study finds", *Sydney Morning Herald*, 29 April 2014.

[6] G. J. McDonell, "N.S.W. Government Ownership and Risk Management in a Mandatory Pool - 'Neither Fish nor Fowl nor ...'," in *Power Progress: An Audit of Australia's Electricity Reform Experiment*, ed. Graeme Arthur Hodge, et al. (Melbourne: Australian Scholarly Publishing, 2004), 79; ———, "N.S.W. Government Ownership and Risk Management in a Mandatory Pool - 'Neither Fish nor Fowl nor ...'" 79.

physically exist, those that do, notably White Bay, Ultimo, and Penrith in Sydney, and Wangi on Lake Macquarie, are visible reminders to new generations of consumers, that the energy source that powers their air conditioner and television does not originate at a power point in their residence.[7] From the perspective of past employees, these re-used stations, and those that no longer exist are arguably, the ECNSW's and Pacific Power's greatest legacy. Sydney's Star Casino, for example, occupies the site of Pyrmont Power Station, with the station's administration building forming part of the casino's office complex. The buildings of Ultimo Power Station form part of Sydney's Powerhouse Museum. Port Botany Container Terminal is on the site once occupied by Bunnerong Power Station. Apartment blocks and public parkland overlooking Sydney's Iron Cove occupy the Balmain Power Station site. Newcastle's Zarra Street Power Station has been replaced by parkland and harbourside accommodation. White Bay Power Station, remains as a rusting reminder of Sydney's metropolitan power stations. It is unique as it retains a representative set of machinery (fifty MW turbine/generator set, boiler, coal handling plant and plant control room) associated with the generation of electricity in the mid-twentieth century.[8]

Of lesser nostalgic value, though of greater significance in the early twenty-first century, are the Electricity Commission constructed generating and transmission assets that are still in operation. Of NSW's current electricity generating capacity, the Electricity Commission / Pacific Power constructed over seventy per cent.[9]

---

[7] Mark Fetscher's five volumes outlining the technical details of a number of NSW power stations and transmission systems, contribute the public awareness of past and current electricity infrastructure. Heritage reports on five Sydney adn two regional power stations are discussed on pages 292-293.

[8] Don Godden, *The Significance of White Bay and Balmain Power Stations to Sydney's industrial heritage: a report to the Electricity Commission of NSW.* (Sydney1989). 21.

[9] "Electricity Generation [NSW]," NSW Department of Trade and Investment, http://www.energy.nsw.gov.au/electricity/generation#Major-existing-NSW-power-stations. [Accessed 28 September 2014].

Literature Review

To date, research into the NSW electricity generation and transmission industry has focused on specific political, economic or technical issues, rather than the Electricity Commission / Pacific Power as a public authority for fifty-two years. For example, Rosenthal and Russ in discussing the inefficiencies of state based electricity networks, present a brief two-page history of the NSW industry as an appendix.[10]

The absence of a comprehensive corporate history represents a gap in the knowledge of an organisation, many of whose power stations and transmission lines continue to supply electricity to NSW and interstate consumers. Furthermore, this gap in knowledge is highlighted by a lack of acknowledgment of the organisation's management of the burgeoning increase in both electricity sales and system peak demand in the forty-two years to 1994.[11] The ECNSW's reluctance to instigate or cooperate in such research prior to its demise is regrettable if only for the missed opportunity to examine the wealth of relevant internal primary source material no longer accessible after 2003. Equally, the author regrets not following through on a belated positive response from Pacific Power in 2002 to his request to research the organisation's history. Notwithstanding these misfortunes of the past, this review examines the relevant, extant literature associated with the primary research themes of this study.

In exploring the role the ECNSW played in the rise of a coordinated electricity generation and transmission industry in New South Wales during the twentieth century, the study draws on extant documentary primary sources of the ECNSW and Pacific Power and those of its predecessors. These include Annual Reports, internal unpublished reports, minutes of Board Meeting, employee magazines and a large collection of ECNSW commissioned photographs. These sources are augmented by contemporary reports and analyses presented in newspapers. In more recent years, at least to the end

---

[10] Stephen Rosenthal and Peter Russ, *The Politics of Power - Inside Australia's Electric Utilities* (Melbourne: Melbourne University Press, 1988). 297-98.

[11] *Annual Reports of the Electricity Commission of New South Wales / Pacific Power.*

date of this study, a small number of journal articles commenting on issues of the day have been cited.

Industry operational structures

A number of authors have examined the structural development of electricity systems from the perspective of network interconnections.[12] Of these, Thomas Parke Hughes suggests that they enable electricity generation assets to be located at the most appropriate locations, generally at the fuel source, and facilitate the important aspect of centralised coordination of generation dispatch and system operation. Hughes' overall value to this study, however, is the concept of a "systems approach" to the development of technology.[13] In its most basic form, technological systems comprised multiple components that are required to operate in conjunction with each other for the system as a whole to deliver the required output. Hughes further argues that society shapes the development and utilisation of technology that in turn influences society's development. However, Harold L Platt is critical of Hughes' placement of technology as an equal, if not the leading factor in this interplay with society. Platt argues that "human choice" in the form of business, political and consumer preferences, rather than the "inexorable logic of the machine" is the dominant force in the development of electric power systems. [14] Nevertheless, for this study the value of Hughes' work is his basic premise that technical systems develop in identifiable phases. This aspect of his work forms a methodological cornerstone of this study and is examined in detail later in this chapter.

---

[12] John A. Casazza, *The Development of Electric Power Transmission: the role played by technology, institutions, and people*, IEEE case histories of achievement in science and technology (New York: Institute of Electrical and Electronics Engineers, 1993). 1-26. Alexandra von Meier, *Electric Power Systems: a conceptual introduction* (Hoboken, N.J.: John Wiley & sons, 2006). 144-94. Thomas Parke Hughes, "The Electrification of America: The System Builders," *Technology and Culture* 20, no. 1 (1979): 124-61. Helen Reilly, *Connecting the Country : New Zealand's National Grid 1886-2007* (Wellington, N.Z.: Steele Roberts, 2008).
[13] Thomas Parke Hughes, *Networks of Power - Electrification in Western Society, 1880-1930* (Baltimore: Johns Hopkins University Press, 1983). 14-18.
[14] Harold L. Platt, *The Electric City: Energy and the Growth of the Chicago Area, 1880-1930* (Chicago: University of Chicago Press, 1991). xvi.

John A. Casazza, provides this study's second methodological cornerstone by charting the evolution of electricity networks in the United States (US) through identifiable phases from small *isolated plant*, through *individual systems*, and *regional systems* to *interregional systems*. As with Hughes' work, Casazza's thesis provides a valuable model to guide this study and is also discussed later in this chapter.

Alexandra von Meier, unlike John Casazza, presents network interconnection as a single event and does not address the multiple phases between small disparate power stations and full interregional interconnection. Nevertheless, she and Casazza imply that operational coordination between interconnected networks was a natural outcome of interconnection. The NSW experience would suggest otherwise. The level of coordination between separate utilities following the initial interconnection in 1941 / 1942 was, at best minimal, and only achieved a high level with the formation of a single statewide entity, the ECNSW in 1950.

In supporting Hughes's premise that social, economic and technical factors intertwine as stimuli for utilities to interconnect their networks, von Meier highlights a number of perhaps obvious, yet crucial concepts.[15] Reliability of supply relates to the options offered by interconnection to exchange electricity in emergencies, improved opportunities to carry out plant maintenance, reduced requirement for each network to carry excessive reserve capacity, and the operation of the most cost-effective production units. While not necessarily a prominent feature in NSW, interconnection can also embody a sense of community, national, or cultural progress. For example, in the early decades of the Soviet Union, large scale technology projects, including electrification, were viewed as a solution to many social and economic critical issues.[16] Economically, network

---

[15] von Meier, *Electric Power Systems: a conceptual introduction*: 144-47.
[16] Paul R. Josephson, ""Projects of the Century" in Soviet History: Large Scale Technologies from Lenin to Gorbachev," *Technology and Culture* 36, no. 3 (1995): 519. "WEM [Wholesale Electricity Market] Structure," Independent Market Operator, http://www.imowa.com.au/electricity-and-gas-services/market-structure. [Accessed 12 October 2014], 1-7.

interconnection in the US provided opportunities for the exchange of electricity between interregional networks. These exchanges often had a commercial aspect in the form of the sale of electricity to other utilities or retailers. This commercial aspect only became a prominent feature of the NSW industry in the late 1990s with the introduction of the interregional National Electricity Market (NEM), four decades after the initial interregional interconnection.

Social factors

A crucial aspect of the growth of electricity networks is the interplay between social factors and the demand for electricity. Population growth, community prosperity, urban expansion and modernisation are significant drivers of the use of electricity.[17] The cost of electricity also plays an important role in determining the level of demand. Lower prices often encourage greater usage, while higher prices reduced usage. This is particularly relevant for residential consumers who, unlike industrial and commercial consumers, are often influenced by non-cost, physiological and social factors rather than cost alone.[18] Forecasts of the future demand for electricity influences decisions made by utilities about the size and number of generating and transmission assets that need to be constructed.

While not a dedicated history of the Electricity Commission, George Wilkenfeld's 1989 Macquarie University thesis on Sydney's energy system, nevertheless is a most relevant discussion on the broad technical and political aspects of the early to mid-twentieth-century electricity supply industry and early decades of the Electricity Commission. Wilkenfeld incorporates numerous statistical and analytical insights. Of particular relevance is his use of the concept of "electrification" to describe the evolution of an "electricity-intensive state."[19] Essentially, he is suggesting that the process of electrification is the displacement of non-electrical sources of energy, such as wood, coal

---

[17] George Wilkenfeld, "The Electrification of the Sydney Energy System, 1881-1986" (Macquarie University, 1989), 261.
[18] _____, "The Electrification of the Sydney Energy System, 1881-1986," 32.
[19] _____, "The Electrification of the Sydney Energy System, 1881-1986," 18.

gas, animal or human power, by electricity. In Sydney / NSW, Wilkenfeld suggests that this process reached its peak in the late-1970s.[20] However, he does not suggest that the demand for electricity peaked in that period only that the degree of electrification had reached its zenith. With increases in population, the introduction of new appliances and industrial processes, the absolute level of demand continued to increase.

Politics and electricity

Extant primary sources relating to the relationship between the various state governments and electricity generating authorities are sparse. Hansard, the record of the proceedings of the NSW Parliament, has transcripts of parliamentary debates relating to the Electricity Commission, Pacific Power and their predecessors. Many of these debates relate to issues pertaining to employee general issues including superannuation, sick leave and industrial relations. Of those parliamentary debates related to the primary issues examined in this study, Minister J.J.Cahill's comments on the formation of the ECNSW in 1950, as well as Treasurer Michael Egan's 2000 and 2003 comments on the Powercor court case and Pacific Power's dissolution are central to an appreciation of the formation and demise of the organisation .[21] These transcripts are indicative of the valuable insights Hansard offers on the government's relationship with the public generating authorities.

Non-parliamentary evidence of the relationship is also limited. Arguably, the most significant relates to the political and technical autonomy exercised by the ECNSW during its first thirty-five years. Cahill's 1950 assertion that it was not his intention to

---

[20] George Wilkenfeld and Peter Spearritt, *Electrifying Sydney - 100 years of Energy Australia* ([Sydney]: EnergyAustralia, 2004). 6. This implies for example, that by the late 1970s the percentage (not the number) of households or industries connected to the electricity distribution networks had reached saturation point. Over the following decades, that percentage did not change significantly. However, the absolute number of connections did increase as the population grew. Consequently, the level of demand increased.

[21] New South Wales, *Parliamentary Debates*, "Electricity Commission Bill," Legislative Assembly, 12 April 1950, (J.J. Cahill, Secretary for Public Works). New South Wales, *Parliamentary Debates*, "Pacific Power (Dissolution) Bill," Legislative Council, 26 June 2003, (Egan, Treasurer); New South Wales, *Parliamentary Debates*, "Pacific Power and Powercor Out of Court Settlement," Legislative Council, 6 September 2000, (———, Treasurer).

interfere with the work of the Electricity Commission, and inaugural Chairman H.G. Condé's 1956 corroboration that the Minister does not interfere are crucial to understanding the early relationship.[22] Comments such as these, while illuminating, are rare, and are indicative of ministerial, and more significantly Electricity Commission executives', reluctance to make public comment on the relationship between government and its principal electricity supply authority.

Prior to the Electricity Commission's formation, electricity had been supplied by a myriad of primarily local and state government authorities. Perhaps not surprisingly, this arrangement was heavily influenced by the experiences of the early British electricity supply industry. While private British companies had been the pioneers in the development of electricity generation in that jurisdiction, as demand grew, municipalities increasingly shouldered the task of supplying electricity to their individual localities. Leslie Hannah's discussion on this aspect of the early British public supply of electricity offers insights into the development of the early NSW industry.[23] These insights focus primarily on the ability of NSW local government municipalities, county councils, and state government departments, having access to finance at advantageous rates in order to develop their individual networks.

At the time of the formation of the ECNSW in 1950, the SCC was the largest electricity authority in NSW. Gordon Anderson's *Fifty Years of Electricity Supply* paints a somewhat sympathetic picture of this organisation. Its focus on the generating and distribution activities of the Municipal Council of Sydney and its successor, the SCC, nevertheless makes a significant contribution to an understanding of these

---

[22] State Records of NSW: Electricity Commission of New South Wales, NRS 16540/1/1, *Minutes of Board Meeting*, J. J. Cahill, 22 May 1950, Minute #1. H. G. Conde, *The Organisation of the Electricity Commission of New South Wales and an Outline of its Activities: a talk to the Royal Institute of Public Administration (N.S.W. regional group) on May 3, 1956* (Sydney: Electricity Commission of New South Wales, 1956).

[23] Leslie Hannah, *Electricity Before Nationalisation: A Study of the Development of the Electricity Supply Industry in Britain to 1948* (London: Macmillan, 1979). 22-23.

organisations.[24] George Wilkenfeld and Peter Spearritt's *Electrifying Sydney: 100 years of Energy Australia* draws heavily on Anderson's work. Their work, published in 2004 to celebrate one hundred years of electricity supply by the SCC / EnergyAustralia, not surprisingly views these organisations in a somewhat sympathetic vein.[25] While presenting a comprehensive view of the development of electricity supply in Sydney, there is limited reference to the Electricity Commission and then only in relation to the SCC. For example, the authors note that the transfer of the Sydney County Council's generating assets, and a major proportion of its workforce to the Electricity Commission in 1950 was a "major wrench" for the SCC.[26] Some former SCC employees were reported to believe that that organisation was not fully credited with nursing the system through the war years and the subsequent period of power shortages.[27] While acknowledging that the civil works for Pyrmont B power station had not been completed by the time the new plant arrived, Wilkenfeld and Spearritt do not directly attribute the causes for the delay to the SCC as did Minister for Local Government J.J. Cahill.[28]

Once the ECNSW had been established, electricity supply became a technical issue rather than a political one. In contrast, the two decades leading to the ECNSW's demise in 2003, while initially subject to plant failures and supply problems, were overwhelmingly political and economic in nature and hence precipitated an increased level of discussion. Writing in 1988, at the end of eight years of "unprecedented upheaval" in the Australian electricity industry, Stephen Rosenthal and Peter Russ, called for an efficient electricity supply industry to ensure that consumers had access to lower

---

[24] Gordon F. Anderson, *Fifty Years of Electricity Supply* (Sydney: Sydney County Council, 1955).
[25] Wilkenfeld and Spearritt, *Electrifying Sydney - 100 years of Energy Australia*.
[26] ———, *Electrifying Sydney - 100 years of Energy Australia*: 33.
[27] ———, *Electrifying Sydney - 100 years of Energy Australia*: 33.
[28] ———, *Electrifying Sydney - 100 years of Energy Australia*: 31. New South Wales, *Parliamentary Debates*, "Electricity Commission Bill," Legislative Assembly, 12 April 1950, 5717 (Cahill, Secretary for Public Works).

priced electricity.[29] While there are many references to the ECNSW in this work, only a two-page summary of the history of the NSW industry is provided as an appendix.[30] Likewise, Robert Booth in 2000, in arguing for a national approach to electricity supply, examines the initial developments of the industry on a broad national basis.[31] However, this was written with a disproportionate focus on Victoria, at the expense of the other states including NSW. Nevertheless, works such as these do provide a focused insight into the industry at a critical time.

At times, the State Government appeared to use the Electricity Commission as a tool to promote regional development and protect regional employment.[32] Aynsley Kellow uses the term "distributive politics" to describe "pro-development" governments that actively supported public generating authorities, such as the Electricity Commission, in "expansionist electricity planning."[33] These policies frequently dovetailed with the mindset of a number of senior ECNSW managers who suggested, "anyone who lived through a period like [the postwar power crisis] has got a relatively conservative view of the importance of having adequate reserve capacity."[34] Senior management mindsets such as this suggest that generation planning, while generally based on statistical evidence of past electricity sales and in later years predicted end-use, were influenced by emotional or individual experiences, in addition to government policies.

Richard F. Hirsh's examination of the origins of deregulation and restructuring in the American electric utility system highlights a number of activities that had parallels in

---

[29] Rosenthal and Russ, *The Politics of Power - Inside Australia's Electric Utilities*: 284.
[30] ———, *The Politics of Power - Inside Australia's Electric Utilities*: 297-98.
[31] Booth, *Warring tribes - The Story of Power Development in Australia*: xi-xiii.
[32] Rosenthal and Russ, *The Politics of Power - Inside Australia's Electric Utilities*: 51.
[33] Aynsley J. Kellow, *Transforming power: the politics of electricity planning* (Cambridge, UK ; New York: Cambridge University Press, 1996). 3, 31, 161.
[34] B. Beatty, "Frank Brady. The First 30 Years - a race with demand," *Australian Electrical World* 53, no. 13 (1988): 13.

NSW.[35] The first was a consensus between investor-owned power companies and legislators and regulatory commissions, to designate electricity generation as a natural monopoly. In return for the right to sell electricity in a non-competitive market, power companies were obligated to pass on to consumers any benefits that arose from the operation of the monopoly. These benefits were generally in the form of lower prices and reliable service delivery. Similar obligations and policies were evident in NSW prior to 1950, albeit with a mainly public industry, with each electricity utility operating as a natural monopoly in a franchised non-competitive market. Such an arrangement continued after 1950 with the ECNSW operating a statewide monopoly in a non-competitive market. This arrangement was only terminated in the 1990s, and early twenty-first century, with industry disaggregation, the implementation of a national electricity market and the privatisation of the public generators. The exercise of this lower price / reliability of supply obligation in a profit orientated, competitive market environment is, however, worthy of future research.

Leslie Hannah's discussion of the United Kingdom's postwar nationalised electricity supply industry leads to an awareness of a number of parallels in the development of the ECNSW and that of the British Electricity Authority, its successor the British Central Electricity Authority and later the Central Electricity Generating Board. Both the British and the NSW industries could trace their origins to a prewar fragmented generation industry and a postwar capacity crisis.[36] Both had to contend with rapid increases in demand, and rapid expansion of their generation capacity. Both were subject to restrictions placed on British plant and equipment manufacturers of generating plant by United Kingdom government planners.[37] Both were also subject to shortages of

---

[35] Richard F. Hirsh, *Power loss: the origins of deregulation and restructuring in the American electric utility system* (Cambridge, Mass.: MIT Press, 2000). 1-2.
[36] Leslie Hannah, *Engineers, Managers and Politicians - The First Fifteen Years of Nationalised Electricity Supply in Britain.* (London: MacMillan, 1983). 23.
[37] ———, *Engineers, Managers and Politicians - The First Fifteen Years of Nationalised Electricity Supply in Britain.*: 24.

resources and skilled labour for their power station construction programs. At the height of each jurisdiction's power crisis in the late 1940s, both had to resort to cutting power supplies to specific areas in peak periods.[38] Both had to call on consumers to their reduce use of electricity by not using domestic appliances, and industry to stagger working hours away from peak periods.[39] As with the ECNSW and its primary objective, the Central Electricity Generating Board sole statutory obligation was the provision of an efficient, coordinated and economical supply to England and Wales.[40]

Economics and the Electricity Commission

A number of authors have addressed the theme of economics and the electricity supply industry on an Australia-wide basis and at an NSW level.[41] Many of these commentaries offer insights into issues including the performance of the electricity supply industry and the economic reforms of 1980 to 2000.[42] However, government initiated inquiries while

---

[38] ———, *Engineers, Managers and Politicians - The First Fifteen Years of Nationalised Electricity Supply in Britain.*: 23.

[39] ———, *Engineers, Managers and Politicians - The First Fifteen Years of Nationalised Electricity Supply in Britain.*: 23.

[40] Rob Cochrane, *Power to the People: The Story of the National Grid* (Feltham: Newnes, 1985). 46. *Annual Reports of the Electricity Commission of New South Wales / Pacific Power*. Andrew Holmes, *Privatising British Electricity: Restructuring and Resistance* (London: Financial Times Business Information, 1992). 8.

[41] H. M. Kolsen, "The Economics of Electricity Pricing in N.S.W," *Economic Record* 42, no. 100 (1966): 555-71; G. D. McColl, *The Economics of Electricity Supply in Australia* (Carlton, Vic.: Melbourne University Press, 1976); D Cahill and S Beder, "Regulating the Power Shift: the State, Capital and Electricity Privatisation in Australia," *Journal of Australian Political Economy* 55, no. June 2005 (2005): 5-22; G. J. McDonell, "Power Supply, Energy Markets and National Coordination: A Critique," *Australian Quarterly* 61, no. 1 (1989): 4-16; Jane Niall, Rhonda Smith, and Peter Wilson, "The Economic Impact of Electricity Shortages," *Australian Economic Review*, no. 58 (1982): 62-72; J Pierce, D Price, and D Rose, "The Performance of the N.S.W. Electricity Supply Industry," in *Productivity and Growth* (Reserve Bank of Australia, 1995); Rix and Johnson, *Powering the Future : the electricity industry and Australia's energy future*.

[42] Pierce, Price, and Rose, "The Performance of the N.S.W. Electricity Supply Industry," 188-91. Kolsen, "The Economics of Electricity Pricing in N.S.W," 560-61.

reviewing past policies and events, were often the catalyst for changes in energy or organisational policies and initiatives.

The majority of economic commentaries relate to the period from the late 1970s and correspond with the end of the thirty-year era of declining electricity production costs in NSW. In 1976 McColl, for example, voiced concerns in relation to a number of authorities failing to utilise adequate evaluation techniques in planning major projects, and a lack of transparency, even secrecy, about planning decisions.[43] In addition, he questioned whether authorities viewed their prime role as increasing electricity sales, and acquiring new generating and transmission assets or lowering costs. McColl, however, fails to identify reliability of supply as the primary goal of the generating authorities. Johnson and Rix, in 1991, question the industry's "lacklustre management performance," lack of accountability and transparency and mindset seemingly focused on growth. They also identify a lack of coordination between the states on issues such as planning and operations.[44]

The political and economic environments in the final two and a half decades of the twentieth century in Australia were dominated by economic reform in its many variations. These included: *economic rationalism; neoliberal economics; micro-economic reform; market competition corporatisation*; and *liberalisation*. Michael Pusey extends this list by adding *tax reform, privatisation, labour market reform, user-pays and deregulation*.[45] Most if not all played a part in the ECNSW's final years and many instrumental in its demise. Pusey defines economic rationalism and its variants as "the only reliable means

---

[43] McColl, *The Economics of Electricity Supply in Australia*: 149-50.
[44] Rix and Johnson, *Powering the Future : the electricity industry and Australia's energy future*: xiii.
[45] Michael Pusey, "An Australian story: the troubling experience of economic reform," Department of the Senate http://encore.newcastle.edu.au/iii/encore/record/C__Rb3402220__San%20australian%20story%3A%20the%20troubling__Orightresult__U__X6?lang=eng&suite=cobalt. [Accessed 12 September 2014], 1.

of settling values on anything."[46] Cahill and Beder suggest that markets "when freed from state interference are the most efficient, and most moral way of providing goods and services in society."[47] Brendan Martin agrees and suggests that the private sector and market dynamics would resolve issues of inefficiencies in the supply of commodities.[48] Rather than society defining what was in the best interests of the public, the market and competition would do so. However, this is not to suggest that economic reforms were always viewed as a positive process. Sharma, writing in 2003, questions the economic focus of this neoliberal reform agenda and suggests that "serious analysis and debate on the political, social, environmental, and other dimensions of reform" is required.[49] Part of his argument centres on the concept of "public interest," one of the cornerstones of electricity industry reform. He questions how it is defined and measured, especially in circumstances where non-market, non-economic solutions may be required. Even Pusey argues that Australia has been "profoundly changed" by a "locust strike of economic rationalism" from Britain and the US. [50]

An important feature of the political or economic commentaries discussed to this point is their author's interpretations of what has already taken place. They are commenting on the past. In contrast, government initiated inquiries and their recommendations and reports while drawing on past policies and events, were often the catalyst for policy

---

[46] ———, "An Australian story: the troubling experience of economic reform" [Accessed 12 September 2014], 8.
[47] Cahill and Beder, "Regulating the Power Shift: the State, Capital and Electricity Privatisation in Australia," 1.
[48] Brendan Martin and Public Services International., *In the public interest? - privatization and public sector reform* (London Atlantic Highlands, N.J.: Zed Books in association with Public Services International, 1993). 2.
[49] Deepak Sharma, "The multidimensionality of electricity reform--an Australian perspective," *Energy Policy* 31, no. 11 (2003): 1093-97.
[50] Michael Pusey et al., *The experience of middle Australia : the dark side of economic reform* (Cambridge: Cambridge University Press, 2003). xiii. Michael Pusey, *Economic rationalism in Canberra : a nation-building state changes its mind* (Cambridge, England ; Melbourne: Cambridge University Press, 1991). 1-2.

changes, or industry and organisational restructuring. Three NSW Government and one Commonwealth-initiated inquiries in the 1980s, and early 1990s heralded far-reaching micro-economic reforms that influenced the ECNSW for the remainder of its existence. The first, the 1983 report on the ECNSW's *Performance Planning and Future Direction* is discussed later in this chapter. The second, the 1986 *Commission of Inquiry into Electricity Generation Planning in NSW* was in response to the overcapacity in actual and planned generation assets and the considerable capital investment requirements.[51] The third inquiry was the 1988 *Focus on Reform: Report on the State's Finances*, commonly referred to as the 'Curran Report'. It concluded that the state had been financially "living beyond its means" and that the "key to improving the efficiency of government operations [was] to adopt a more commercial market-based approach."[52] The Commonwealth's 1991 Industry Commission Report on *Energy Generation and Distribution*, in recommending the disaggregation of the monopolistic public generating authorities, had far-reaching bearing on the operational and organisational structure not only of the ECNSW but the entire Australian electricity supply industry.[53]

ECNSW management

A prominent, recurring feature of the management style of the Electricity Commission has been a tendency towards less than open administrative transparency. Howard Dick's 1981 *Power Subsidies to Aluminium Smelters in NSW* while examining the ECNSW's and State Government's negotiations with prospective aluminium smelting companies,

---

[51]G. J. McDonell: 1, *Report One: Planning, Economy, Flexibility Options Through the Mid 1980s.*, 1986, 5; *Report One: Planning, Economy, Flexibility Options Through the Mid 1980s.*, 5.

[52] Commission of Audit., Inquiries, Special Reports *Focus on Reform: Report on the State's Finances*, vol. Executive Summary (Sydney: New South Wales, Commission of Audit, 1988). v-vi.

[53] *Energy Generation and Distribution*: Industry Commission, 1: Summary and Recommendations, 1991.

expresses concern with a lack of public transparency about the discussions.[54] His comments with regard to access to Electricity Commission information, and a seeming lack of public accountability, are reinforced by Gavin McDonell's 2004 claim that the organisation was, in addition to being technically advanced and politically powerful, was remote and unaccountable.[55] Access restrictions placed on the organisation's *Board Minutes* held by the State Records Authority of New South Wales, supposedly by Pacific Power, reinforce these assertions of a lack of administrative transparency. A mindset or culture of unwillingness to make public comment is evident over a decade after Pacific Power's dissolution. The reluctance of a number of former members of the Electricity Commission or Pacific Power's executive to participate in this study, or to discuss certain issues, may be viewed as a personal decision to divorce themselves from their former work life, or more likely as a continuation of an organisation mindset that shied away from public scrutiny.

With a small number of exceptions, commentaries by early executives of the Electricity Commission are limited to Annual Reports. Chairman H.G. Conde's, 1956 presentation outlining the early structure of the organisation is noteworthy for the insight it offers into the relationship between the State Government and the organisation's senior management.[56] Vice Chairmen V.J.F. Brain, writing in 1952, presents a technical overview of the state of the NSW electrical supply industry in the years immediately

---

[54] Howard W. Dick, University of Newcastle (N.S.W.). Dept. of Economics., and University of Newcastle (N.S.W.). Institute of Industrial Economics., *Power subsidies to aluminium smelters in N.S.W*, Industry economics discussion paper (Series) ([Newcastle, N.S.W.]: Dept. of Economics and Institute of Industrial Economics, University of Newcastle, 1981). 1-30.
[55] Ross Gittins, "All-Electric Home is the Real Blackout Culprit", *Sydney Morning Herald*, Sydney Morning Herald, 2 July 1981. McDonell, "N.S.W. Government Ownership and Risk Management in a Mandatory Pool - 'Neither Fish nor Fowl nor ...'" 79.
[56] Conde, *The Organisation of the Electricity Commission of New South Wales and an Outline of its Activities: a talk to the Royal Institute of Public Administration (N.S.W. regional group) on May 3, 1956*: 1-16.

before and after the formation of the Electricity Commission.[57] In 1960, Brain's successor, Fred Sykes, outlined details of the size and location of the three major power stations the Electricity Commission was to construct over the following twelve years.[58] Equally significant, this commentary notes that senior management were discussing nuclear energy as an option for future power stations. Sykes, and by inference the Electricity Commission, nonetheless viewed nuclear power as not economically viable in the foreseeable future.[59] Nevertheless, by the end of the 1960s, the Electricity Commission was heavily involved in the Australian Atomic Energy Commission's nuclear power station project at Jervis Bay.[60]

Non-Annual Report commentaries by later executives of the Electricity Commission and Pacific Power are equally limited in number.[61] Of these, the 1996 oral history interviews of Frank Brady (former ECNSW Vice-Chairman, Chairman, and General Manager) are crucial to an understanding of the ECNSW up to the early 1980s.[62] While Brady has not written of his three to four decades at the highest levels of the organisation, these oral histories provide a level of detail of the management process of the organisation that is unique, perceptive and enlightening. Regrettably, Brady has

---

[57] V.J.F. Brain, "Presidential Address - Some Observations on Electricity Supply on the Australian Mainland," *Journal of the Institution of Engineers* 24, no. June (1952): 123-28.
[58] F Sykes, "Development of the Electrical Supply System and the Future of Nuclear Power in New South Wales," *Journal of the Institution of Engineers Australia* 32, no. July-August (1960): 139-41.
[59] ———, "Development of the Electrical Supply System and the Future of Nuclear Power in New South Wales," 139-41.
[60] Keith Alder, *Australia's uranium opportunities* (Sydney: Pauline Alder, 1996). Anna-Eugenia Binnie, "From atomic energy to nuclear science: a history of the Australian Atomic Energy Commission" (Macquarie University, 2003), 185-264.
[61] Ross Bunyon, "Restructuring Australia's Electricity Supply Industry" (paper presented at the Asian Electricity Conference, Hong Kong, 26-27 April 1994); John Conde: 25 (1), *Four Decades of Achievement*, 1990, 5-7.
[62] Frank Brady, interviewed by Mary Ann Hamilton, MLOH 286/34 - 39 (Partial Restrictions), Mitchell Library Oral History Collection, State Library of New South Wales, October - November 1996.

placed a personal embargo on the release of those sections of these interviews covering the price negotiations between the ECNSW and aluminium producers in the early 1980s, and the 1986 inquiry into generation planning in NSW.[63] Brady's embargo, three decades after the events, highlights his perception of the sensitivity of the political and financial issues, and is perhaps also out of respect for the political and organisation personalities involved.

In many instances, ECNSW publications provide insight into the business mindset of the organisation. However, the minutes of the Electricity Commission's Board Meetings, initially assumed to be a primary window into the organisation, have proven to be of limited research value.[64] The entry for each meeting only records the outcome of each decision made, and rarely includes details or background to that decision. It is also worth noting that the set of Board Minutes held by the State Records Authority of New South Wales has a fifty-year "Closed for Public Access" limitation imposed on them. The listed reason for this restriction is that the documents contain sensitive personal information. State Records indicate that the original owner, Pacific Power, would have imposed such a restriction when the material was logged.[65] As it proved difficult to locate any information that could be considered sensitive to third parties, the worth of the Board Minutes in this research exercise is not in the content, rather it is Pacific Power's rationale for imposing access restrictions. This finding is confirmed by a review of a second set of Board Minutes (1950-1992) held at Eraring Power Station that do not have a similar access restriction.

For an organisation with over three decades as a hierarchical, bureaucratic public organisation, the 1983 internal report on the ECNSW's *"Performance and Future*

---

[63] Brady's embargo expires in 2018.
[64] State Records Authority of New South Wales: Electricity Commission of New South Wales, NRS 16540/1/1 to NRS 16540/1/129, *Minutes of Board Meeting*, 1950 - 2002.
[65] "Access Regulations," State Records Authority of New South Wales, http://www.records.nsw.gov.au/recordkeeping/topics/access-regulation/access-regulation. [Accessed 29 July 2013].

Direction" is noteworthy for its objectivity. In addition to questioning the organisation's planning processes, this report was instrumental in instigating major changes in the structure of top level management and, in the realigning of the extensive power station construction program of the 1980s and 1990s with revised lower growth forecasts.[66] Robert Booth refers to this report as "a marvel of clarity [that is] not at all flattering to previous Boards and management."[67] Likewise, Stephen Rosenthal and Peter Russ comment that the report was "most uncharacteristic of Commission documents [for] its frank discussion of problems."[68]

Of the available primary sources, the Electricity Commission Annual Reports are perhaps the "most immediate of sources."[69] Their strength lies in providing a continuous management perspective on the business and its corporate development. These and other Electricity Commission produced, or initiated publications, are rarely of a critical or negative nature. In the main, they extol the virtues and positive aspects of the organisation. Similarly, the Annual Reports of the NSW Department of Public Works, and the SCC are rarely critical of their organisation.[70]

Aspects of the human side of the organisation are recorded in *Network*, the organisation's in-house staff magazine.[71] This monthly window on the organisation was published from July 1958 to December 2002. *Network* provided employees with their only view of the wider organisation, be it management-generated and positive. Articles

---

[66]Electricity Commission of New South Wales: *Report of the Electricity Commission of New South Wales on Performance and Future Direction*, 1983, 13-14.
[67] Booth, *Warring tribes - The Story of Power Development in Australia*: 81-82.
[68] Rosenthal and Russ, *The Politics of Power - Inside Australia's Electric Utilities*: 12-13.
[69] *Annual Reports of the Electricity Commission of New South Wales / Pacific Power.* Wilkenfeld and Spearritt, *Electrifying Sydney - 100 years of Energy Australia*. Sources and Further Reading. 5.
[70] *Report of the Department of Public Works*: 1912 - 1950. *Report of the General Manager of the Sydney County Council*: 1936 - 1953.
[71] "Network - Offical Monthly Newspaper", Electricity Commission of New South Wales / Pacific Power, 1958 - 2002.

and photographs regularly appeared on the appointment of senior management, as well as highlighting technical and engineering developments. Coverage of the history of the organisation regularly appeared on anniversaries of its formation. Articles and photographs highlighting employees at work and socially are in abundance. Articles reporting the detailed corporate or financial dealings of the organisation are absent.

Technology

The technical performance of the NSW electricity industry was critical in the period leading up to the formation of the Electricity Commission in 1950. The Electricity Commission's first Annual Report does not comment on the political background to the formation of the organisation.[72] Instead, its commentary focused on the technical aspects of the postwar electricity generation and transmission system and the generation assets the Electricity Commission acquired from the major electricity authorities. Not surprisingly, the Electricity Commission's first Chairman, H.G. Conde, reaffirmed that technical rather than political issues were the basis for the organisation's formation.[73] In contrast, the responsible Minister in the NSW Government at that time, J.J. Cahill, was not so reserved in his condemnation of the pre-1950 authorities for their mismanagement of the industry.[74] Accusations of failing to adequately plan for the future, despite the effects of the Second World War, were levelled at both the SCC and the NSW Government Railways. The postwar power supply crisis was intensified by a number of factors: delays in the delivery of new equipment; civil works not ready when new equipment was eventually delivered; the quantity and quality of coal supplied to power

---

[72] *Annual Report for the Year Ended 30th June 1952*: 1952, 5-17.

[73] Conde, *The Organisation of the Electricity Commission of New South Wales and an Outline of its Activities: a talk to the Royal Institute of Public Administration (N.S.W. regional group) on May 3, 1956*: 4.

[74] Stewart Howard and Associates, *The Power Crisis in Australia, 1951*. (Sydney: Stewart Howard and Associates Pty. Ltd., 1951). vii. "Electricity Bill Before Assembly", *Newcastle Morning Herald*, 13 April 1950. "County Council Unequal to the Task", *Sydney Morning Herald*, 13 April 1950.

stations; the age of existing plant and a substantial increase in the demand for electricity.[75]

Apart from the highly detailed technical and operating manuals, reports and drawings produced by the Electricity Commission, the only substantial discussions of the technical features of power generation assets in NSW in the period under review are four works by Mark Fetscher.[76] These works are self-published and unlikely to have been peer-reviewed. Nevertheless, a review of the technical detail relating to a number of the power stations would tend to indicate that the information contained in these works is accurate.[77] Fetscher provides a wealth of detailed technical information on over forty NSW power stations of varying sizes, technologies and eras. Of these, the Electricity Commission owned and operated seventeen major steam power stations. There is, however, no discussion of an additional forty-five Electricity Commission power stations, twelve of which were steam, and eleven internal combustion stations from the early years of the organisation. The ECNSW's early 1950s small "Package Stations," and the privately owned Balmain Power Station, that made significant contributions to eliminating of the blackouts in the early 1950s are not discussed. Nor are two wind-powered stations, seven hydro stations, and a number of gas turbine powered stations, most of which are currently operating. Nevertheless, Fetscher's works constitute the only consolidated work on this topic, and as such provide an important long-term historical record of the engineering aspects of the NSW power generation industry.

---

[75] *The Power Crisis in Australia, 1951.*: v-xii.

[76] Mark Fetscher, *The Power Makers: the History of the Central Coast and Hunter Valley Power Generating Stations* (Charlestown, N.S.W.: M. Fetscher, 2001).; ———, *The Power Stations of the N.S.W.G.R.*, Rev. ed. (Charlestown, N.S.W.: M Fetscher, 2003).; ———, *The Power Stations of the Sydney County Council* (Charlestown, N.S.W.: M Fetscher, 2004). ———, *The Colliery Power Stations* (Charlestown, N.S.W.: M. Fetscher, 2008).

[77] The author has personal technical knowledge of Liddell and Eraring Power Stations.

A "grow and build" approach utilised by many US investor-owned utilities, is certainly identifiable in an NSW context.[78] Hirsh describes this approach as a technology based strategy of increasing sales of electricity at declining prices. The installation of larger and improved generating technology resulted in more efficient production processes with lower production costs. Coupled with the active promotion of the use of electricity, an ongoing spiral of more production at lower costs was the result. In the US and partly in NSW, what was a seemingly self-fulfilling process floundered on the slowing of the benefits arising from technological economies of scale, the energy crisis of the early to mid-1970s, and an increasing public awareness of environmental issues.

Models and methodology

A major frustration in researching the history of the Electricity Commission was the organisation's reluctance to instigate or cooperate in the research and publication of an authorised institutional history. In contrast, the State Electricity Commission of Victoria (SECV) published Cecil Edwards's *Brown Power: a Jubilee History of the State Electricity Commission of Victoria* in 1969.[79] In similar vein, the Queensland Electricity Commission published Malcolm I. Thomis's two volume *History of the Electricity Supply Industry in Queensland* in 1987 and 1990.[80] EnergyAustralia's 2004 commemorative publication *Electrifying Sydney* by George Wilkenfeld and Peter Spearritt presents a

---

[78] Hirsh, *Power loss: the origins of deregulation and restructuring in the American electric utility system*: 46-50. ———, *Technology and transformation in the American electric utility industry* (Cambridge [England] ; New York: Cambridge University Press, 1989). 19-21.
[79] Cecil Edwards, *Brown Power : a Jubilee History of the State Electricity Commission of Victoria* (Melbourne: State Electricity Commission of Victoria, 1969).
[80] Malcolm I. Thomis and Queensland Electricity Commission., *A history of the electricity supply industry in Queensland. Volume II, 1938-1988* (Brisbane: Boolarong Publications for Queensland Electricity Commission, 1990); ———, *A history of the electricity supply industry in Queensland. Volume I, 1888-1938* (Brisbane: Boolarong Publications for Queensland Electricity Commission, 1987).

corporate view of the history of that organisation.[81] The ECNSW sadly did not follow the lead of its interstate colleagues.

In the mid-1950s, Guy Allbut suggested that such an industry or organisational history be viewed in three main divisions.[82] Early generation activities with or without legislative approval are followed by the industry's fragmented development and the rise of the county councils. Finally, he identified the consolidation of generation, transmission and distribution by the public sector. Allbut suggests the development of the NSW electricity generation and transmission industry during the twentieth century involved many, often complex, intertwined technical, political, economic, organisational and social layers. The evolution of the electricity supply network, in NSW and elsewhere, is a combination of the system approach, incorporating social, economic, political and organisational components with the development of a number of interrelated technologies. As Bijker and Low argue, this evolution is both heterogeneous and contingent.[83]

Although there has been much research conducted into the political and economic aspects of the NSW industry, particularly in the latter quarter of the twentieth century, little has been directed towards the industry's technical and organisational structures, society's impact on the industry and the community's utilisation of electricity. While each of these perspectives is well grounded, and will form part of the main discussion, each, by itself, has limitations in providing an overall longitudinal perspective of the generation industry in NSW. To assist in overcoming this deficiency, this study draws on two

---

[81] Wilkenfeld and Spearritt, *Electrifying Sydney - 100 years of Energy Australia*. While lamenting the absence of a corporate initiated and published history of the ECNSW, the author is mindful that such corporate histories can be plagued by a lack of objectivity on the part of the author.

[82] Guy Allbut, *A brief history of some of the features of public electricity supply in Australia: and the formation and development of the Electricity Supply Association of Australia, 1918-1957* (Melbourne: Electricity Supply Association of Australia, 1958). Preface.

[83] John Law and Wiebe E. Bijker, "Do Technologies Have Trajectories: Introduction," in *Shaping technology/building society: studies in sociotechnical change*, ed. John Law and Wiebe E. Bijker (Cambridge, Mass.: MIT Press, 1992), 18.

methodological models.[84] The first presents a socio-technical systems perspective of the electrification process and the second, a perhaps more practical view of electricity network development. While not developed from Australian research, their utilisation in this research does not imply that industry events were they dictated by them. Rather each, particularly the discussion on network development, is utilised to impart a degree of order to the multiplicity of seemingly unrelated industry events when applied to an NSW context.

Socio-technical model of electrification

The first model that this study utilises is Thomas Parke Hughes's discussion of the development of large technical systems as applied to the development of electricity supply networks.[85] As noted above, Hughes employed a systems approach firmly anchored in socio-technical theory. This combination firstly suggests that complex, functional, organisational structures often group themselves around a specific technology, such as electricity networks, to achieve their goals.[86] Further, technologies invariably comprise interconnected parts or components, and that changes in one or more of the system's components influences the operation of other parts of the system or its final output.[87] Electricity networks are particularly susceptible to cascading component failures.[88] Widespread power outages, or blackouts for example, are often the result of cascading failures of items of plant. Secondly, Hughes argues that technical systems

---

[84] Hughes, *Networks of Power - Electrification in Western Society, 1880-1930*. Casazza, *The Development of Electric Power Transmission: the role played by technology, institutions, and people*.

[85] Hughes, *Networks of Power - Electrification in Western Society, 1880-1930*: 14-17.

[86] Jochen Monstadt and Matthias Naumann, "New Geographies of Infrastructure Systems: Spatial Science Perspectives and the Socio-technical Change of Energy and Water Supply Systems in Germany," *Network - papers* 10(2003), https://books.google.com.au/books?id=n6tMVuRNFNEC&printsec=frontcover#v=onepage&q&f=false, (Accessed 18 June 2015)

[87] Hughes, *Networks of Power - Electrification in Western Society, 1880-1930*: 5-6.

[88] M. E. J. Newman, *Networks: an introduction* (Oxford ; New York: Oxford University Press, 2010). 31.

interact with non-technical, society-based components. Society's use of electrically powered consumer appliances, for example, determines the operational output of the electricity generation process. However, Platt (as noted above) and David Nye, emphasise the role of consumer choice. [89] Nye argues that choice is at the heart of the form of the electrical system. The consumer decides if they will buy a larger house, install electric rather than gas space heating, or in the very early years of the twentieth century the choice of electricity as a source of energy instead of gas, wood or animal or human muscles. Essentially, Hughes is arguing that technology in playing a pivotal role in society in its many manifestations is in turn shaped by society.[90] In doing so, technology's artefacts and their outputs are invented, developed, operated, regulated, maintained and managed by people. Hughes has described the interaction between technology and society as a "seamless web" in which each is influenced by the other.[91]

Bernwood Joerges confirms Hughes' systems premise noting that systems incorporate machines and freestanding structures performing, predictable, complex standardised operations integrated with social processes.[92] As the following chapters will illustrate, notwithstanding the commonality of the initial technologies, the outcomes of system development achieved in separate jurisdictions was varied.[93] Technology, political

---

[89] Platt, *The Electric City: Energy and the Growth of the Chicago Area, 1880-1930*: xvi. David E. Nye, *Consuming Power: a social history of American energies* (Cambridge, Mass. ; London: MIT, 1999). 263-64.

[90] F. W. Geels, "The dynamics of transitions in socio-technical systems: A multi-level analysis of the transition pathway from horse-drawn carriages to automobiles (1860-1930)," *Technology Analysis & Strategic Management* 17, no. 4 (2005): 445 - 46.

[91] Thomas Parke Hughes, "The Seamless Web: Technology, Science, Etcetera, Etcetera," *Social Studies of Science* 16, no. 2 (1986): 281-92.

[92] Bernwood Joerges, "Large technical systems: Concepts and ideas," ed. Renate Mayntz and Thomas Hughes, *The Development of Large Technical Systems* (Boulder: Westview Press, 1988), http://ezproxy.newcastle.edu.au/login?url=http://hdl.handle.net/2027/heb.01147.0001.001. (Accessed 9 July 2015), 23-24.

[93] Law and Bijker, "Do Technologies Have Trajectories: Introduction" 17.

debate, economics, organisations and consumers in each jurisdiction contribute to the shape of systems.[94]

Joerges also place emphases a number of features outlined by Hughes. These include reverse salients, Load Factor and momentum.[95] The first two relate to the internal dynamics of technological systems and the third, as noted above, incorporates external effects. A salient, in a military context, relates to a position beyond the general line of advance. Hughes' use of reverse salients refers to events, or processes that have, or have the potential, to hinder the development of an electrical system. The geographical limitations imposed by direct current transmission, or the output limitations of air cooled generators are examples. Load Factor, a mathematical ratio, is utilised to indicate how efficiently assets are being utilised. Leslie Hannah succinctly describes Load Factor as a measure of the "intensity of [the] use of capital."[96] There are a number variations on how this ratio is calculated. Hughes utilises the ratio of average load to the peak load in a set period of time.[97] The ECNSW utilised a slightly different ratio as a measure of the efficient use of specific generating plant or the system as whole. This ratio, called Capacity Factor, compares actual usage against what could have been produced if the plant had operated at full output during the set period.[98] The CEGB in the United Kingdom also utilised actual generation, but termed it Load Factor rather than Capacity Factor.[99]

---

[94] Kenneth Lipartito, review of *The Development of Large Technical Systems*, by Thomas P. Hughes and Renate Mayntz, *Journal of Economic History*, 50, no. 1 (1990): 254.
[95] Joerges, "Large technical systems: Concepts and ideas," 13-14.
[96] Hannah, *Engineers, Managers and Politicians - The First Fifteen Years of Nationalised Electricity Supply in Britain.*: 290.
[97] Hughes, *Networks of Power - Electrification in Western Society, 1880-1930*: 218.
[98] *Electricity Development and Fuel Sourcing Plan*: 1992, 81.
[99] Hannah, *Engineers, Managers and Politicians - The First Fifteen Years of Nationalised Electricity Supply in Britain.*: 290.

Hughes's model of electrification that guides this discussion (Figure 1.1) encompasses five phases: initial invention and initial development; initial technology transfer; system growth; technological momentum; and the rise of non-technical issues.

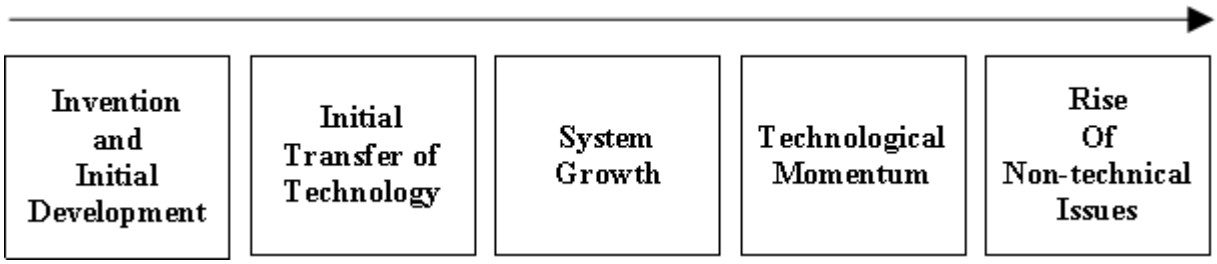

Figure 1.1 Thomas Parke Hughes' socio-technical model of the electrification process. Source: Adapted by the author from Thomas Parke Hughes, *Networks of Power - Electrification in Western Society, 1880-1930*: (Baltimore: Johns Hopkins University Press, 1983). 14-17

This model echoes, in part, Starr and Rudman's 1973 representation of technological growth as following a 'S' shaped curve.[100] This curve, which represents performance against time, suggests that technological development as have an initial period of slow growth that could equate to Hughes' 'invention' and 'initial transfer phases.' This followed by a period of exponential growth that could relate to Hughes's phases of 'system growth' and 'technological momentum.' Starr and Rudman view the final phase of a particular technologies development as one of maturity in which technical performance may be subject to social constraints or physical limitations. In a broad sense the impact of 'social forces' rather than constraints or limitations best equate to Hughes' final phase, the 'rise of non-technical issues.'

Consideration of each phase in a NSW context assists in highlighting important, if not critical, technical and social junctions in the development of the state's electricity supply industry. That said, the initial phase involving the invention and the initial development of the technologies to generate, distribute and utilise electricity were external to Australia, and are not considered in this study.

---

[100] Chauncey Starr and Richard Rudman, "Parameters of Technological Growth," *Science* 182, no. 4110 (1973): 360-62.

Technology transfer, the second phase of Hughes's model, can be defined, at least in an NSW context, as the import of power generation and transmission technologies into the state.[101] For the most part, the major technologies for electricity production originated in the United Kingdom, the US, Europe and in the late twentieth century, Japan. For example, British steam turbine technology, so essential to the production of large quantities of electricity, was first introduced in the early 1900s at Ultimo and Pyrmont power stations.

The third phase is evident as the system grows. The community's demand for electricity drove utilities to construct infrastructure to meet that demand. Concurrently the availability of reliable and relatively cheap electricity encourages the community to consume electricity in increased quantities through new processes and appliances. A crucial aspect of this and the other phases of the industry's development is the resolution of critical technical problems, or reverse salient, that hinder or limit the growth of the system.[102] For example, the limited service area of DC systems was a critical technical issue that hindered the supply of electricity from a central power station to wider areas. The introduction into NSW of steam turbine and AC technologies in the early twentieth century resolved this issue. These technologies paved the way for electricity to be supplied from central power stations in metropolitan Sydney to all areas of the city. Hughes also suggests that as a system grows, and new and larger plant and equipment are installed the number of people employed in and associated with the industry grows. Consequently, the employees, politicians, contractors and other trades and professions who populate the electricity landscape, are active components as are the generators, transformers, or high voltage transmission lines.[103]

---

[101] Bruce Edsall Seely, "Historical Patterns in the Scholarship of Technology Transfer," *Comparative Technology Transfer and Society* 1, no. 1 (2003): 8.
[102] Hughes, *Networks of Power - Electrification in Western Society, 1880-1930*: 140.
[103] ———, *Networks of Power - Electrification in Western Society, 1880-1930*: 17.

The fourth phase is evident when a system acquires momentum.[104] In addition to growth in demand and production, the goals, aims, or policies of the organisational participants impart a sense of direction to the system's development. At an organisational level, these include financial achievement (profit or return on investment), or technical goals such as reliability of supply, high production efficiencies and high Capacity Factors.[105] At a political level, government policy and industry regulator actions also play a crucial part in providing direction. Momentum is also a function of the number of external organisations and people influencing the system. This latter group includes consultants of varying engineering professions, industrial organisations such as trade unions, universities carrying out research relevant to the industry, and learning institutions training industry professional, technical and tradespeople.

In the fifth phase, the recognition and resolution of critical technical issues, while still evident, are often overshadowed by seemingly more important non-technical political, financial, organisational and of recent times, environmental issues.[106] In 1920s NSW, for example, high voltage transmission technologies were available to interconnect the individual systems existing at that time. However, the construction of the required interconnections would have required State Government promotion and support that was not forthcoming.

While Hughes' development phase model is applicable to the development of electricity networks, it does not automatically follow that it applies to the analysis of other large systems. For Hughes to be relevant in each analysis, social (politics and

---

[104] ———, *Networks of Power - Electrification in Western Society, 1880-1930*: 140.
[105] *Abbreviations, documentations and terms used with Generation*, ed. Training and Development (Sydney: Pacific Power, nd). Capacity Factor is the ratio of actual generating plant output in a set period of time (MWhs) to the output that would have been possible if the generating plant had been operating at it full installed capacity for the set period of time.
[106] Issues include electricity pricing, sources of non-government funding for capital works, industrial relations, relations with the State Government, and carbon dioxide emissions.

economics) factors must take account of technology and scale as distinct phenomena.[107] Large non-technical organisations and bureaucracies, while spatially extended and highly integrated, have their own dynamics and their development may not be described in terms used by Hughes.[108]

The relationship between technical systems, such as electricity networks and society can also be viewed in terms of governance. A general definition of governance relates to authority, decision-making and accountability. In terms of an electricity system, governance includes day-to-day control of the technology and planning for future technologies. At a broader level, governance extends to the management of the political and economic aspects of the industry or organisation.[109]

This study of the NSW generation and transmission industry can be viewed in these terms. At an organisational level, while acknowledging the governance issues of the pre-1950 authorities, this discussion focuses on the ECNSW's and Pacific Power's governance of electricity technology and its management of the relationship with societal governance systems, particularly those of a political nature. This relationship is also reflected in the discussion on society's demand for electricity and the industry and organisational responses to that demand.[110] Likewise, the discussion is mindful of the interactions between the organisations (SCC, Railways, PWD, ELPSC, ECNSW and Pacific Power) and the electricity supply sector, i.e. distribution and retail, as a whole.

Basic network development

In the second model that guides this thesis, John Casazza has identified four basic stages in the evolution of the US electricity transmission system in the period 1885 to

---

[107] Joerges, "Large technical systems: Concepts and ideas," 15.
[108] Hugh G. J. Aitken, review of *The Development of Large Technical Systems*, by Thomas P. Hughes and Renate Mayntz *History of Science Society*, 8, no. 3 (1990): 557-58.
[109] Olivier Coutard, "The evolving forms of governance of large technical systems," in *The governance of large technical systems*, ed. Olivier Coutard (London ; New York: Routledge, 1999), 2.
[110] ———, "The evolving forms of governance of large technical systems" 1.

1985.[111] As shown in Figure 1.2, each stage – isolated plant, individual systems, regional system and interregional systems - depicts the basic network configuration in each period.[112]

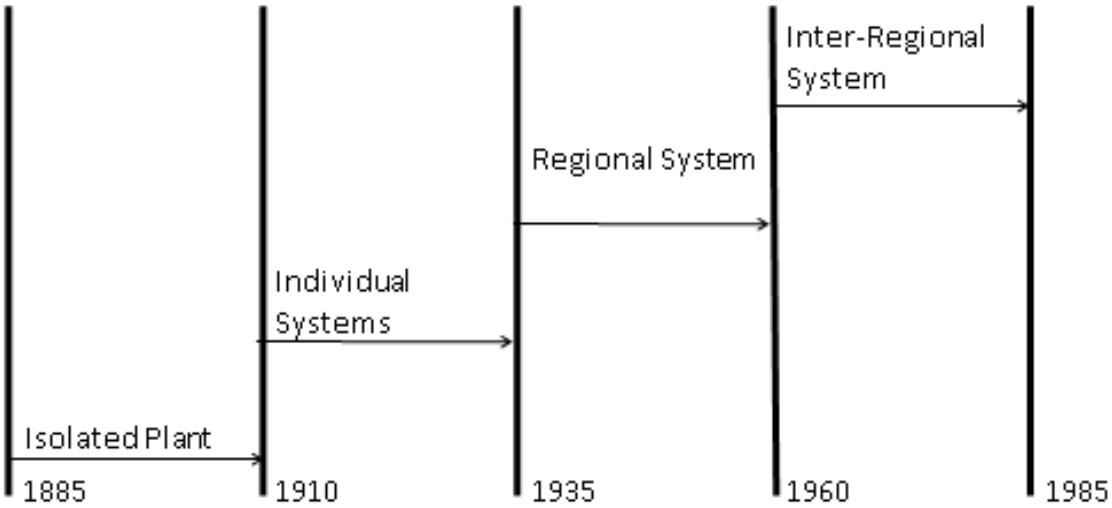

Figure 1.2 Stages of transmission system development in the United States 1885-1985
Source: John A Casazza, *The Development of Electric Power Transmission: The Role Played by Technology, Institutions, and People*, IEEE Case Histories of Achievement in Science and Technology. New York: Institute of Electrical and Electronics Engineers, 1993. 7

The primary characteristics of Casazza's first stage - the isolated plant phase - were the limited output of each power station and the geographically small area supplied. Technical limitations imposed by low voltage direct current (DC) generation and transmission restricted the length of distribution lines. Figure 1.3 shows a basic

---

[111] Casazza, *The Development of Electric Power Transmission: the role played by technology, institutions, and people*: 7-14.

[112] The dates Casazza has identified and shown in Figure 1.1. are applicable only in a US context, and do not apply to NSW. Each of Casazza's phases relates to the concept of central power stations supplying consumers via transmission and distribution networks. This contrasts with an individual generator supplying only the electricity demand of its owner. The world's first centralised power plant (direct current) was established, using technologies developed by Thomas Edison, in London in January 1882 and New York in September 1882. Casazza's commencement date of 1885 for the Isolated Plant phase refers roughly to the introduction of the first alternating current (AC) network.

configuration of this phase in which two geographically separated central power stations supply their customers. While both utilities may be owned by a single organisation, it is more likely they are owned by different entities. Each isolated plant in this configuration may have additional generators installed to provide 'standby' capacity to allow for plant maintenance or breakdowns.

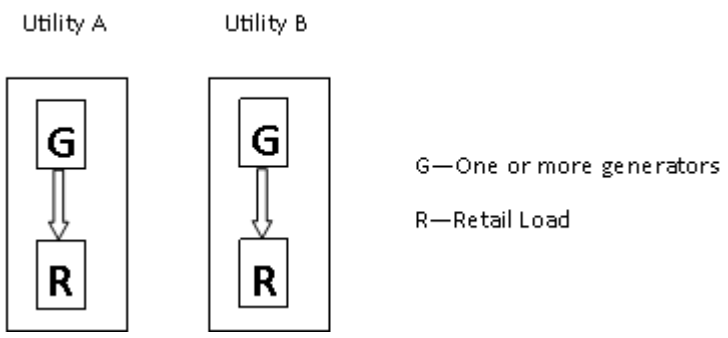

Figure 1.3 Basic configuration of the isolated plant stage of system development.[113]

With the introduction of AC systems and the subsequent increase in the demand for electricity, the number and size of generating units increased. The primary characteristics of Casazza's second phase - individual systems - were an increase in the number of power stations connected to each company or authority's high voltage transmission network. Electricity was supplied from the power station's high voltage switchyard, via the utility's high voltage transmission system to its own distribution substations where its voltage was lowered for reticulation to its franchised consumers. Figure 1.4 shows two basic configurations for individual systems.

[113] In this, and other basic configurations illustrated in this chapter, each utility is a separate entitiy.

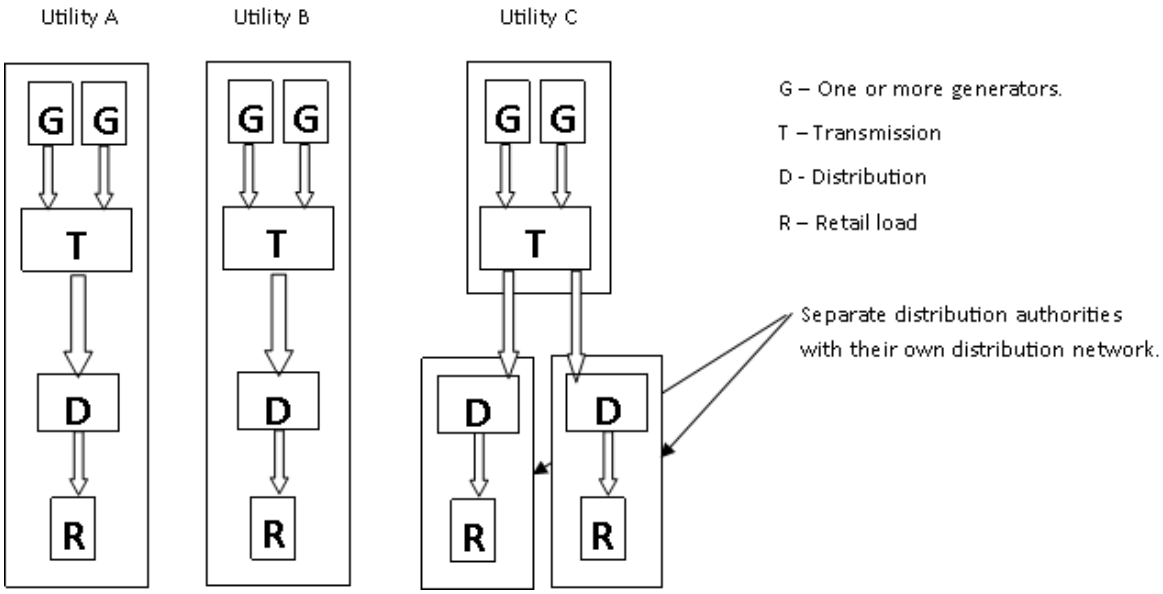

Figure 1.4 Possible configuration of individual systems.

Utilities A and B, while having similar technical structures, are owned by different entities and operate as separate vertically integrated utilities each operating two power stations, in addition to transmission and distribution systems supplying retail consumers in their own franchise area. Utility C, with a different structure, operates two power stations and a high voltage transmission network, but does not distribute electricity directly to consumers. Two separate distribution authorities each supplying their own designated supply area carry out this function. Crucially, as the individual transmission systems are not interconnected power supplies could not be shared during emergencies. As with the previous configuration, each generating utility required sufficient generating capacity, spread over its power stations, to meet peak demand and cater for emergencies and enable plant maintenance to be carried out. Within individual systems, it became possible for power to be sourced from the power stations or generating units, with the lowest production costs. The technical and business focus of utilities in this configuration was localised, and generation infrastructure was often located within or adjacent to the supply area.

As the demand grew, interconnections between individual systems to facilitate the transfer of power in emergencies, access to cheaper electricity and potential consumers, were often constructed. At the generation level of regional systems, the third phase of Casazza's model, the potential benefits of interconnection to each utility and the system

as a whole were significant. Utilities with higher production costs could purchase electricity from an adjacent lower cost producer. Further, individual utilities were no longer obliged to maintain their system's full generation reserve. With interconnection, it became a shared responsibility. However, this arrangement often depended on the strength of the relationship between the owners of each network. Importantly, the aggregation of the individual system loads enabled the commissioning of larger generating units and the consequent economies of scale leading to improvement in production efficiencies and lower production costs. Significantly, improvements in high voltage transmission technologies facilitated the utilisation of the most cost-effective regional sites for new power station construction.

A possible configuration of a regional system, as illustrated in Figure 1.5, Utilities A and B are separate entities each operating a fully vertically integrated individual systems. Utility C, only generates electricity and supplies separate distributors / retailers. However, the overriding feature of this stage of development is the interconnections between the individual high voltage transmission networks. The capacity and effectiveness of such a single interconnected region wide high voltage transmission network was often limited by the capacity of the interconnections and the extent of the operational coordination between utilities.

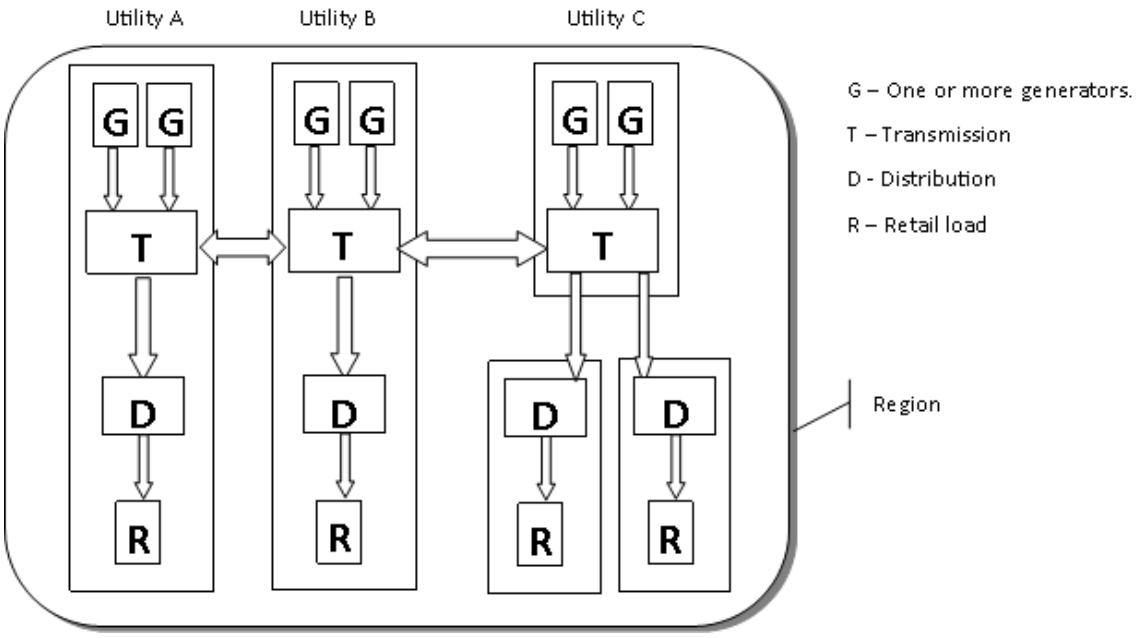

Figure 1.5 Possible configuration of a regional system.

An alternate regional system configuration is illustrated in Figure 1.6. All power stations and the high voltage transmission network are owned and operated by a single generating and transmission authority.[114] Full development and operational coordination of generation and transmission are possible in this configuration. In this example, the single generating authority supplies four separate distribution / retail entities.

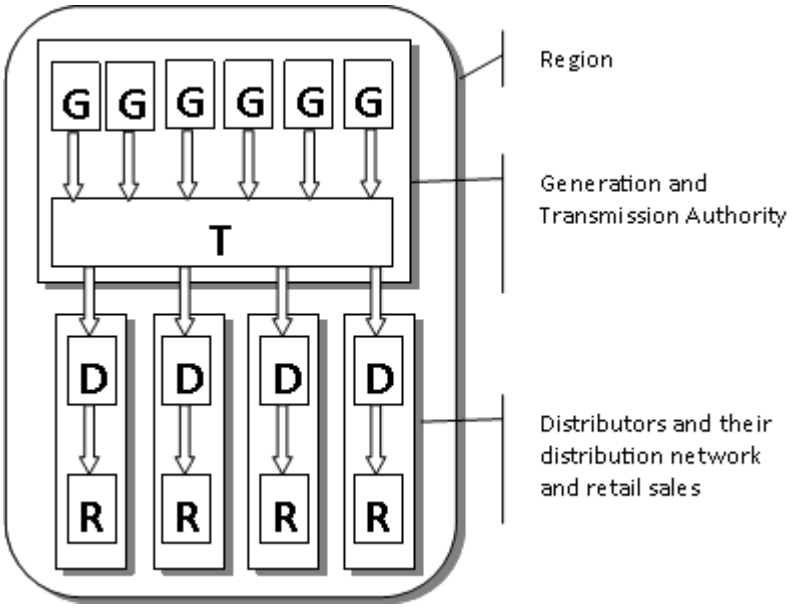

Figure 1.6 Alternate configuration of a regional system (generation horizontally integrated and vertically integrated with transmission.)

Increased regional load growth, sharing of generation capacity in emergency situations, opportunity pricing exchange, and particularly the trading of electricity between regions, are four important reasons for interconnecting regional systems. In this configuration, the fourth phase in Casazza's model, adjacent regional high voltage transmission networks are interconnected forming an interregional network. Figure 1.7 suggests a possible configuration of such an interregional system.

[114] This is the configuration of the NSW system between 1950 and 1995.

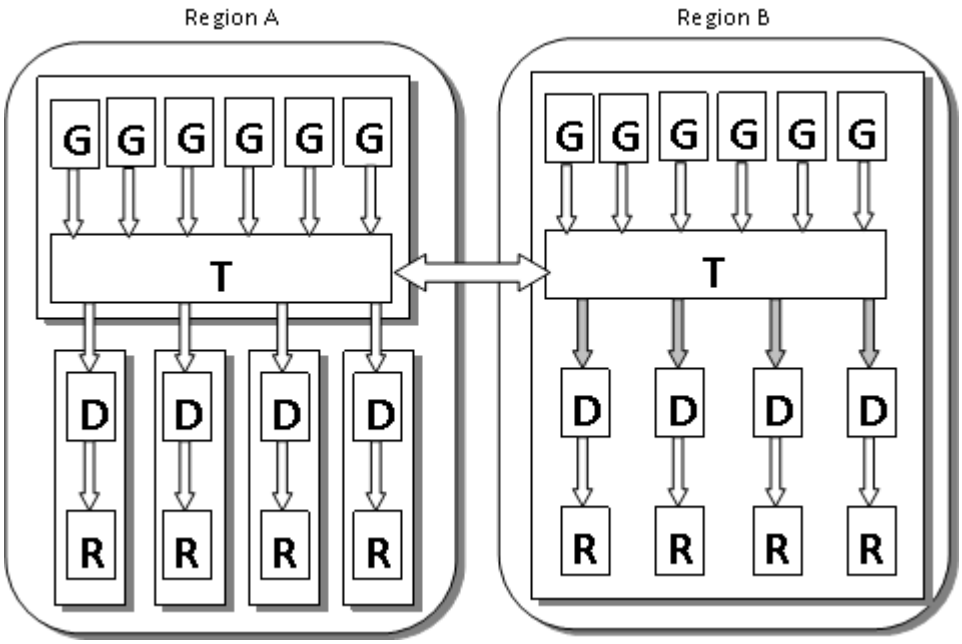

Figure 1-7 Possible configuration of an interregional system.

Region A has a single central generating and transmission authority, and multiple separate distribution and retail bodies. In contrast, Region B has a single fully vertically integrated authority with a structure encompassing generation, transmission, distribution and retail. While operational coordination exists within each regional system, full operational interregional coordination where the combined regions effectively operate as one is possible. However, as with other interconnected arrangements, the level of electricity transfer between regions is dependent on the capacity of the interconnections. Nevertheless, interregional interconnections facilitate the exchange of electricity in emergencies and competitive trading of electricity between generators and retailers in different regions.

Perhaps the most obvious inference to be taken from Casazza is that as demand increased, the network structures changed from there being no interconnection or coordination between networks (isolated plant and individual systems) to full interconnection often culminating with full coordination (regional systems and interregional systems). In addition to increases in demand, the transition from one phase to the next was often a function of system owners becoming mindful of the benefits of interconnection. These included access to larger markets, system security, transfer of

power during emergencies, and a reduced requirement for each system to have the capacity to cover emergencies.

In applying Hughes and Casazza's models to a discussion of the development of the NSW electricity network, it is important to note, as mentioned above, that the various phases of development in both models, are employed to impose order and understanding on a myriad of often unrelated events. Also, the two-dimensional depiction of the Hughes' phases does not imply a sequential progression.[115] Phases appear to often overlap, or to take place simultaneously. Technology transfer, for example, occurred throughout the twentieth century as each new technical improvement became available and not just in the early years of development.

Basic network development in the NSW context

The major benefit gained in using Casazza's four stage model is that it can impart a sense of order to the complexities, intertwined layer and the myriad of events that constitute the NSW electricity generation and transmission industry in the twentieth century. The transition from one phase to the next broadly lagged behind that in the US by between three and seven years. Nevertheless, for the model to be representative of the NSW context a number of modifications are required to Casazza's original model. These are illustrated in Figure 1.8.

[115] Monstadt and Naumann, "New Geographies of Infrastructure Systems: Spatial Science Perspectives and the Socio-technical Change of Energy and Water Supply Systems in Germany". 13.

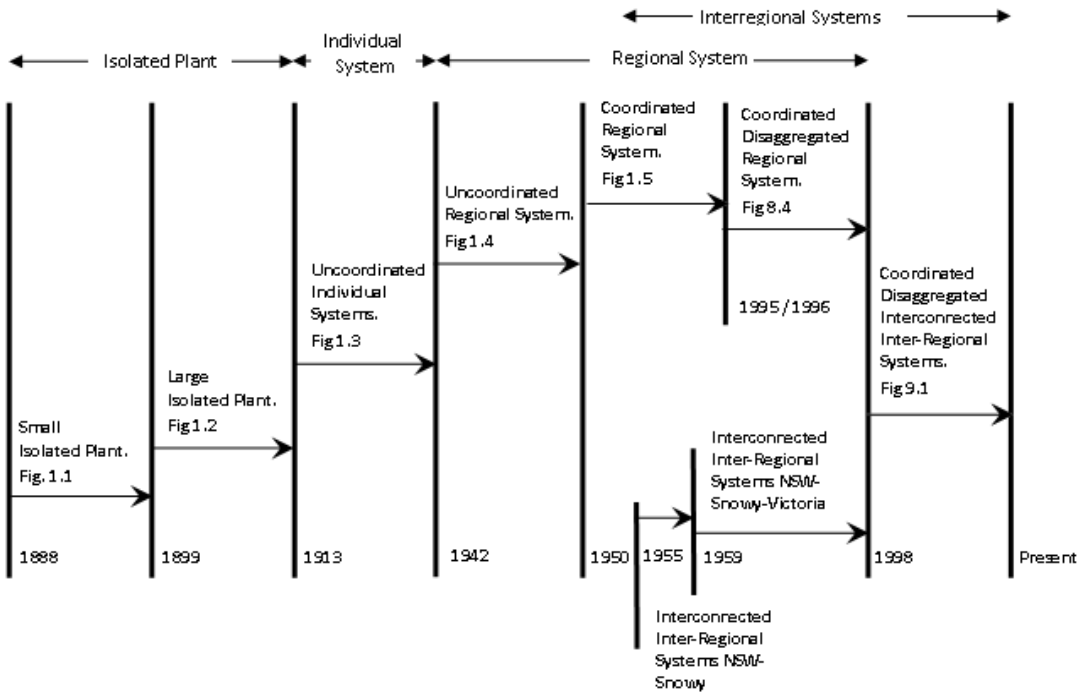

Figure 1.7 Control and operation model modified for the NSW context, with an overlay of Casazza basic model
Source: Adapted by author from John A Casazza, *The Development of Electric Power Transmission: The Role Played by Technology, Institutions, and People*, 7. The Figures referred to in each phase denote the basic illustrations in this and other chapters.

The isolated plant category has been divided into small and large in order to differentiate between the early small power stations, such as Tamworth (1888), and the larger NSW Government Railway power station at Ultimo (1899), Sydney Municipal Council's Pyrmont (1904), and the Public Works Department's stations at Port Kembla (1925) and Burrinjuck Hydro (1928). Casazza's individual systems has been modified to *uncoordinated individual systems* to reflect the additional power stations added to a number of systems. The NSW Government Railways added White Bay to the Ultimo network, and the Sydney Municipal Council added Bunnerong to Pyrmont's network. Importantly, while there was operational coordination within individual systems, there was only temporary or spasmodic interconnection between separate systems. Consequently, planning and operation coordination between the separate generation utilities was limited, hence the term 'uncoordinated.'

In adapting Casazza's regional concept to NSW as a whole, the original phase has been expanded to three separate stages. The first, *uncoordinated regional system* reflects

the wartime interconnection of the major systems. Despite these initial interconnections, there was little overall operational coordination between systems. The second of the regional systems reflects the period from 1950 when the ECNSW owned and operated the NSW interconnected network, hence the term 'coordinated.' The third of the regional systems, the *coordinated disaggregated regional system* reflects the breakup or disaggregation of Pacific Power in the mid-1990s. In this period, two new generating State Owned Corporations (SOC) were created to control seventy per cent of Pacific Power's generation assets. In a similar manner, the ownership and control of the high voltage transmission network and overall operational coordination of generation were transferred to a new SOC. Figure 1.7 also suggests that parallel to the three phases of the NSW regional system, an *interconnected interregional system* existed from 1959. In terms of Casazza's model, and for ease of understanding, these two stages are viewed as operating in parallel until 1998 when *coordinated disaggregated interconnected interregional systems* existed with the establishment of the south-east Australian NEM.

While the allocation of time periods in the socio-technical model is subjective, those in the network structure model relate to specific events. Hence, it is difficult to align the two chronologies. In the NSW network structure model for example, 1888 refers to the commissioning of Tamworth Power station; 1913, the commissioning of White Bay Power Station to join Ultimo on the Department of Railways network; 1942, the interconnection of the four major networks; and 1950, the ownership and overall coordination of the NSW industry by a single public authority. In contrast, in the socio-technical model the initial transfer of basic electricity production technology commenced in the late 1880s with the commissioning of a direct current central generating station at Tamworth. The commissioning of the initial AC and steam turbine technologies at Ultimo and Pyrmont in the early 1900s introduced the basic electricity production process that continues to be used in the twenty-first century. [116] However, as new technologies were

---

[116] Fetscher, *The Power Stations of the N.S.W.G.R.*: 2. Wilkenfeld and Spearritt, *Electrifying Sydney - 100 years of Energy Australia*: 18.

commissioned the technology transfer phase can be considered to be ongoing. Examples include the first use of pulverised fuel technology in the 1930s and the commissioning of turbine steam bypass systems or fabric filter dust collection systems in the 1980s. Equally, the rise in non-technical issues, mainly of a political nature, were not restricted to later periods. Issues including the nature of industry ownership in the form of public or private ownership, political intervention in the form overall energy policy, were evident to varying degrees throughout the entire period of the study, and critical in the final three decades of the twentieth century.

Oral histories

An important feature of this research is the oral histories of many people involved in the industry. In particular, the insights and observations of Frank Brady, a former Chairman of the ECNSW are invaluable. Brady's three decade career as an engineer, manager, and a member of the ECNSW's executive enable him to offer unique insights into the highest levels of the organisation's management.[117] In the course of this research over seventy current and former industry employees contributed by questionnaire or interview. Of these, the comments of twelve have been included in the study. In accordance with criteria associated with the Human Research Ethics approval for this study all interviews, personal communication, and survey responses conducted by the author are confidential. Accordingly, names have been withheld by mutual agreement. Records of interviews in the public domain are cited under the interviewee's actual name.

Overall, the study is an examination of the development and application of a particular aspect of technology, in a particular place and at a particular time. That is the generation of electricity in NSW in the twentieth century and in particular the second half. Nonetheless, to place the discussion in chronological and technical context, the story commences in 1888 and 1899 with the first ventures into central power station operation in regional NSW and then metropolitan Sydney. This study is not a detailed discussion of the political and economic aspects of the NSW electricity generation industry. Nor is it a

---

[117] Brady interviewed by Hamilton, October - November 1996.

detailed study of the social conditions that generated the demand for electricity, or how society was impacted by the availability and use of electricity. Nevertheless, significant organisational incidents and events, including industrial relations, finance, organisational policies or even internal organisational politics are included. Furthermore, this synoptic discussion of the history of such a vital industry cannot avoid examining many diverse, yet intertwined facets: technology; politics; economics; industrial relations; environmental issues; and perhaps surprisingly to many people, nuclear energy. Of paramount importance in such an approach are the contributions to the industry and the people of NSW of some of the industry's senior managers, and of course the multitude of public servants who performed their job, day in day out, with little positive public recognition, and sometimes public derision when industrial action resulted in power restrictions or blackouts.

Chapter structure

While this study has a substantial technical component, the progression of the discussion is not technology based rather it is essentially chronological. However, as illustrated in Figure 1-8, a number of chapters cover the similar time periods. In these instances each discusses either different topics related to that period, or in greater detail unsuited to a wide ranging or general perspective. As noted below, Chapter Two presents an overview of the industry's development over the first half of the twentieth century. Chapter Three in covering the period 1940 to 1950, discusses in greater detail the events and issues that prompted the State Government to establish the ECNSW in May 1950. Similarly, Chapters Four and Five cover the three decades from the organisation's formation to 1980 – Chapter Four from a technical aspect and Five from a political perspective.

Chapter One establishes the rationale and framework for the study. Key questions relating to industry structure, electricity demand and supply, technology, government involvement and interstate and international comparisons are posed. These in turn support the main premise of the study, namely that the ECNSW remained at the centre of the NSW electricity generation industry for over four decades through ensuring that reliability of supply was a primary corporate goal. Two models underpin the study of the key questions and the main premise. The first suggests that interconnected electricity

networks developed in identifiable phases, while the second argues that the development of these networks and the overall electricity supply system is founded on the interplay between society's demand for electricity and technology's ability to meet that demand.

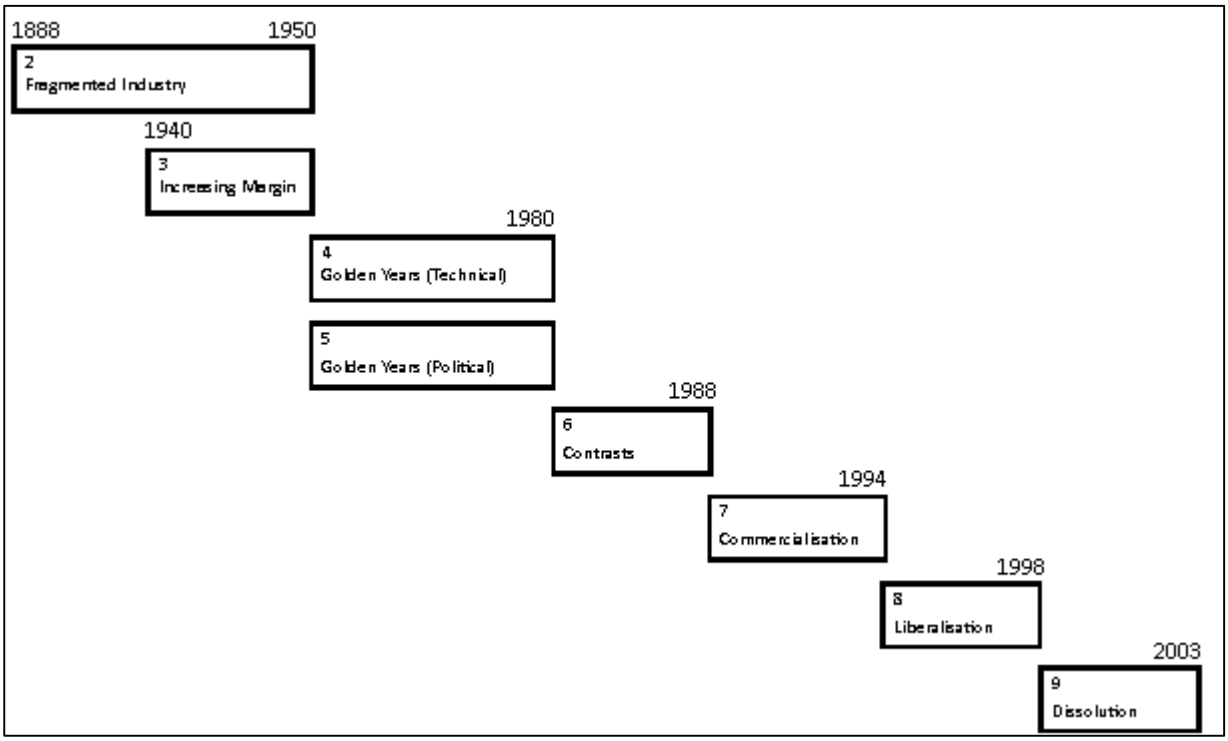

Figure 1.8 Chapter Structure

Chapter Two examines those social conditions of the early to mid-twentieth century, particularly the Great Depression and the Second World War that affected the demand for electricity. The small size of the NSW and Australian electricity generation industry dictated the required technology be imported from international suppliers, notably the United Kingdom. This reliance on overseas manufacturers became critical in the 1940s as British industries focused on their own domestic requirements to the detriment of international orders. Politically, this period is characterised by a liberal, if not laissez-faire, approach by successive state governments to the development of the industry. The seemingly uncoordinated development of the industry resulted in four major generation authorities supplying their own franchised area in Sydney, the Hunter and Illawarra. A myriad of small local authorities supplied portions of regional and rural NSW. For the supply authorities, the concept of a state wide interconnected electricity network did not exist. Each was focused on their own franchise area. This parochial uncoordinated

approach to electricity network development, in conjunction with the postwar power shortages, was instrumental in the formation of the Electricity Commission.

Chapter Three examines in greater depth the decade prior to the formation of the Electricity Commission in May 1950. This decade is set against a primary background of interconnected, yet uncoordinated major systems. For the four major generating authorities, the effect of the Second World War proved to be a critical issue. This is best illustrated by the decline in the margin between a rising demand for electricity and the inability of the major generating authorities to match that increase with an increase in generating capacity. The margin reached zero in 1946 and continued to decline leading to increases in the frequency and duration of blackouts and power restrictions. The NSW Government blamed the four major Sydney generating authorities for their inadequate planning of the expansion of their generating capacity. In their defence, the authorities cited the wartime constraints placed on British manufactures to supply the required equipment. The chapter examines the interplay between a government, initially unwilling to centralise the industry, and an industry beset by international events beyond their control.

In May 1950, the structure of the NSW electricity generation and transmission industry changed from an interconnected, yet, uncoordinated regional arrangement, to a coordinated regional system. From that date, day-to-day control of the industry was vested in a newly established ECNSW. The 1950s, 1960s and 1970s, the focus of Chapter Four, were the Electricity Commission's golden years. The short-term solutions to the severe blackouts and restrictions of the early 1950s are examined first. This is followed by an analysis of several critical electricity generation and supply parameters such as the extent of electricity sales, and peak demand. This analysis identifies trends in their absolute values and more importantly in their annual rates of change as true indicators of the ongoing demand for electricity. Trends such as these are indicative of electricity’s end-use and are considered in the context of the social and economic perspectives of postwar development. These analyses contribute to a discussion of the rationale and extent of the Electricity Commission’s power station construction programme.

Chapter Five examines a number of the political aspects of the ECNSW's first three decades. The statutory authority model chosen for the organisation was hoped to eliminate the political interference evident in a government department, and the limited parochial horizon of local government. However, in achieving its corporate goal of supply reliability when combined with the statutory authority model, established an increasing degree of managerial and technical autonomy. The organisation's success in achieving its initial corporate goals focuses on Harold Graydon, the Electricity Commission's first Chairman. The period is also characterised by the decade long, at times acrimonious trade union campaign for a thirty-five hour working week in the industry. At times, bitter disputes between employer and employees were paralleled by spiteful relations between trade unionists and employees with professional association affiliations. The chapter closes with a review of the organisation's involvement in the Australian Atomic Energy Commission's bid to build a nuclear power station at Jervis Bay. While this project was abandoned on economic grounds, it nonetheless would have dramatically altered the technical and political face of electricity production in Australia.

For the Electricity Commission, the early and mid-1980s were years of contrasts. Chapter Six reviews the initial optimism of the growth in demand, and declining production costs of the previous decades contrasted with a slowing in demand and cost increases. Major plant failures contrasted with the successful commissioning of two large, technically advanced power stations. The power restrictions and blackouts of the early years of the decade contrast to an abundance of generation capacity from the middle of the decade. In many respects, the organisation's first three-and-a-half decades could be typified as years in which the cost of production was secondary to engineering and technical issues.[118] Ostensibly autonomous operations contrasted with a decade of government and public scrutiny and allegations of administrative secrecy surrounding the cost of electricity sold to the state's aluminium smelters.

118

The period 1988 to 1994 are best typified by the emergence of significant non-technical critical issues. Analysis of the commercialisation of the Electricity Commission is the focus of Chapter Seven. Slowing of demand that had been evident through the early and mid-1980s continued to fuel concerns with excess generation capacity. The commissioning of additional capacity in the middle of the period compounded this situation. Interstate and international contracts for the design, project management, or operation and maintenance of power generation facilities extended business activities at this time. A new commercial business model saw the focus on costs and efficiencies continue with the promotion of internal competition between newly formed internal business units

Chapter Eight focuses on the state government's response to the impending implementation of the National Electricity Market and the break up of Pacific Power. For the Electricity Commission, liberalisation of the industry had profound implications. A forty-year-old hierarchical and bureaucratic organisation was transformed into Pacific Power – a leaner, commercially focused electricity generator marketing energy services to national and international markets. These transformative events, however, paled in significance as Australia's largest electricity generator was disaggregated and became the smallest of the three NSW generators. The organisation, in acknowledging the positive outcomes of a competitive electricity market, nevertheless opposed the state government's policy of disaggregation to achieve them. The horizontal breakup of the organisation into three state owned generating utilities and a high voltage transmission authority ended centralised ownership and control of the NSW generating industry. That privatisation did not occur at that time was not a consequence of any objections by the industry, rather the policy failed on the floor of the NSW Labor Party State Conference. The chapter concludes with an analysis of the organisation's role as a corporate environmental citizen.

Chapter Nine examines the final five years of Pacific Power. As the smallest of the three major NSW electricity generators, its final years were plagued by the complexities of trading in the competitive electricity market. The organisation's demise was hastened by a combination of the government's electricity reform policies and procedural irregularities in Pacific Power's electricity trading activities. As with the NSW

Government in 1950 losing confidence in the Sydney County Council and the other major electricity authorities, in 2000 the government, lost confidence in Pacific Power's ability to manage it involvement in the national electricity market. In both instances, new organisations with new management personnel were established to resolve their respective critical issues. The chapter presents an outline of the complexities of spot pricing and swap contracts as an introduction to the irregularities in Pacific Power's electricity trading dealings with Victorian electricity distributor Powercor. In the subsequent court case and echoed in the media, perhaps for the first time, individual Electricity Commission or Pacific Power employees, other than senior management, were named and their actions discussed. While these commentaries were less than complementary to the individuals concerned, it nevertheless raises issues about public recognition of the activities of the thousands of employees, not just in the electricity industry but also of other public organisations.

Chapter Ten draws together the conclusions made in each of the core chapters. It highlights how this study and the conclusions made relate to the broader historiography of the NSW electricity generation industry and the Electricity Commission.

A brief discussion on electricity blackouts and power restrictions from a consumers' perspective is included in Appendix One. The author's career in the electricity generation industry and a personal rationale for this study are included in Appendix Two.

Chapter 2 Fragmented Industry (1888-1950)

Introduction

On any weekday between the end of the Second World War and May 1950, an electricity consumer living in Camden, south-west of Sydney, planning to spend a day visiting her mother in the Sydney suburb of Ashfield, and then shopping in Sydney's Central Business District (CBD) used electricity produced by each of NSW's four major generating authorities. The electricity to boil water for a breakfast cup of tea would be generated by the Department of Public Works' Southern Electricity Supply and purchased from Camden's Municipal Electricity Department. The journey into Ashfield and Sydney would be partly by electric train using electricity generated by the Department of Railways. The electricity used to prepare their morning Devonshire Tea would be generated and retailed by the Electric Light and Power Supply Corporation. Finally, the SCC generated and retailed the electricity used in David Jones and Gowings department stores in Sydney's CBD. Despite the four Sydney networks being initially interconnected in 1942 – 1943, she would have consumed electricity, assuming there were no blackouts or power restrictions, from four separate generating authorities and a number of retailers. This highlights the fragmented nature of the industry prior to 1950 and particularly before 1942.

The primary focus of this chapter and the following one is to review the fragmented nature of the NSW industry before 1950. Following a brief overview of the state of the NSW electricity generation industry prior to 1950, a number of key themes are discussed. These include the seemingly continuing annual increase in the demand for electricity in the first half of the twentieth century, and aspects of electricity generation technologies commissioned to meet that demand. To illustrate the evolution of electricity supply bodies from small isolated plant configuration to uncoordinated individual systems, the networks of Tamworth County Council and the Department of Public Works are examined. As the NSW electricity generation industry did not develop in isolation, it is compared to similar industries in other Australian states, notably Victoria.

A supplementary theme examines the initial efforts to establish an interconnected electricity network for all of NSW. Of particular relevance is the contribution of William Corin, the NSW Department of Public Works' Chief Electrical Engineer, (1907-1923).

That Corin's vision did not eventuate until two decades after his death does not lessen his visionary perspective on the issue.

This chapter concludes that the fragmented structure of the network evolved through the interplay of political, economic and technical factors. While state and local government bodies had access to finances to fund the necessary capital works, each was subject to political forces that perpetuated the fragmented nature of the industry until severe postwar power restrictions, and the potential adverse electoral consequences, provided the State Government with a catalyst to centralise the generation industry.

The following chapter examines in greater detail the operational and political aspects of the industry between 1939 and 1950. In particular, it examines the multiple causes of the severe postwar power restrictions and blackouts that led to the formation of the Electricity Commission.

Fragmented industry

Four distinct, often overlapping phases are evident in the development of the NSW electricity generating and transmission industry before 1950. (see Figure 2.1) Beginning in the 1880s, central electricity generating facilities were small and isolated. As the demand increased these small isolated plants were either upgraded to deliver greater output, or new larger plant commissioned. These then became part of an undertaking's individual system made up of single or interconnected generating plants. While coordination of planning and operations existed within each system, adjacent systems were not interconnected and not coordinated – hence the term "uncoordinated'. Finally, in the early years of the Second World War many individual systems were interconnected to form a larger regional arrangement of separate generating authorities, although overall coordination was still lacking.[1]

---

[1] The uncoordinated / coordinated feature of successive phases refers to the extent of effective planning and operational coordination between separate networks. In a state-wide context a central body often has carriage of the coordinating role.

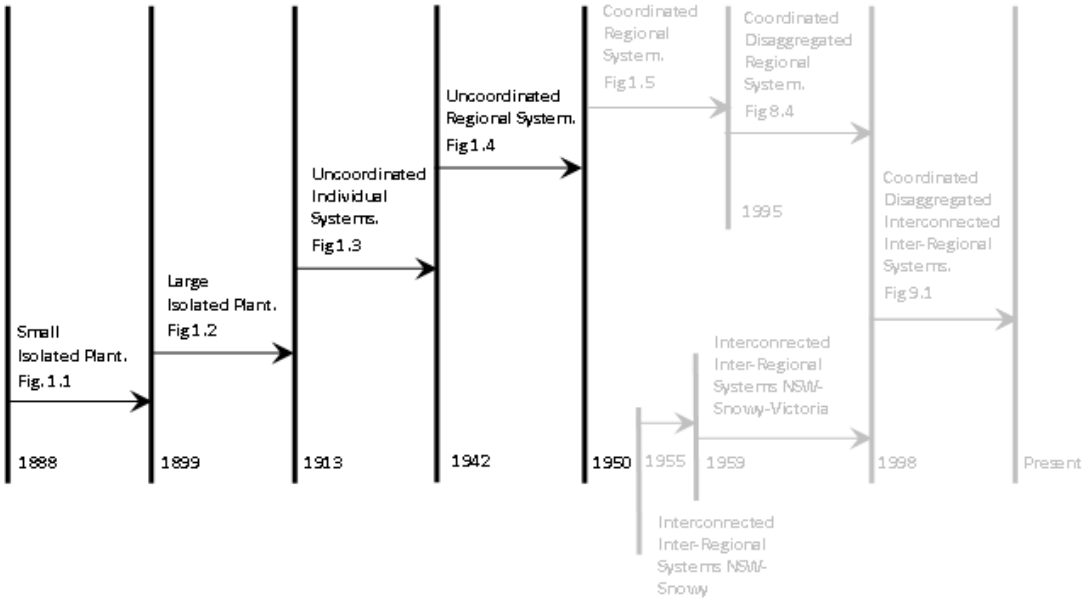

Figure 2.1 Casazza's basic model modified for the NSW context 1888 – 1950
Source: Adapted by author from John A Casazza, *The Development of Electric Power Transmission: The Role Played by Technology, Institutions, and People*, 7.

Despite these rudimentary system interconnections, the prominent feature of the NSW electricity supply industry in January 1950 was its fragmented arrangement of sixty-eight generating authorities and 161 distributors/retailers.[2] In the greater Sydney area, for example, the NSW Government Railways (NSWGR); a local government authority, (SCC); and a private company (Electric Light and Power Supply Company) generated electricity (see Figure 2.2). The NSWGR, in addition to generating electricity for its traction services, supplied bulk electricity, as did the SCC, to Municipal and Shire Councils. Finally, the SCC and the Electric Light and Power Supply Company generated and retailed electricity to their own franchised/tied consumers.

[2] Stewart Howard and Associates, *The Power Crisis in Australia, 1951*.: xxii.

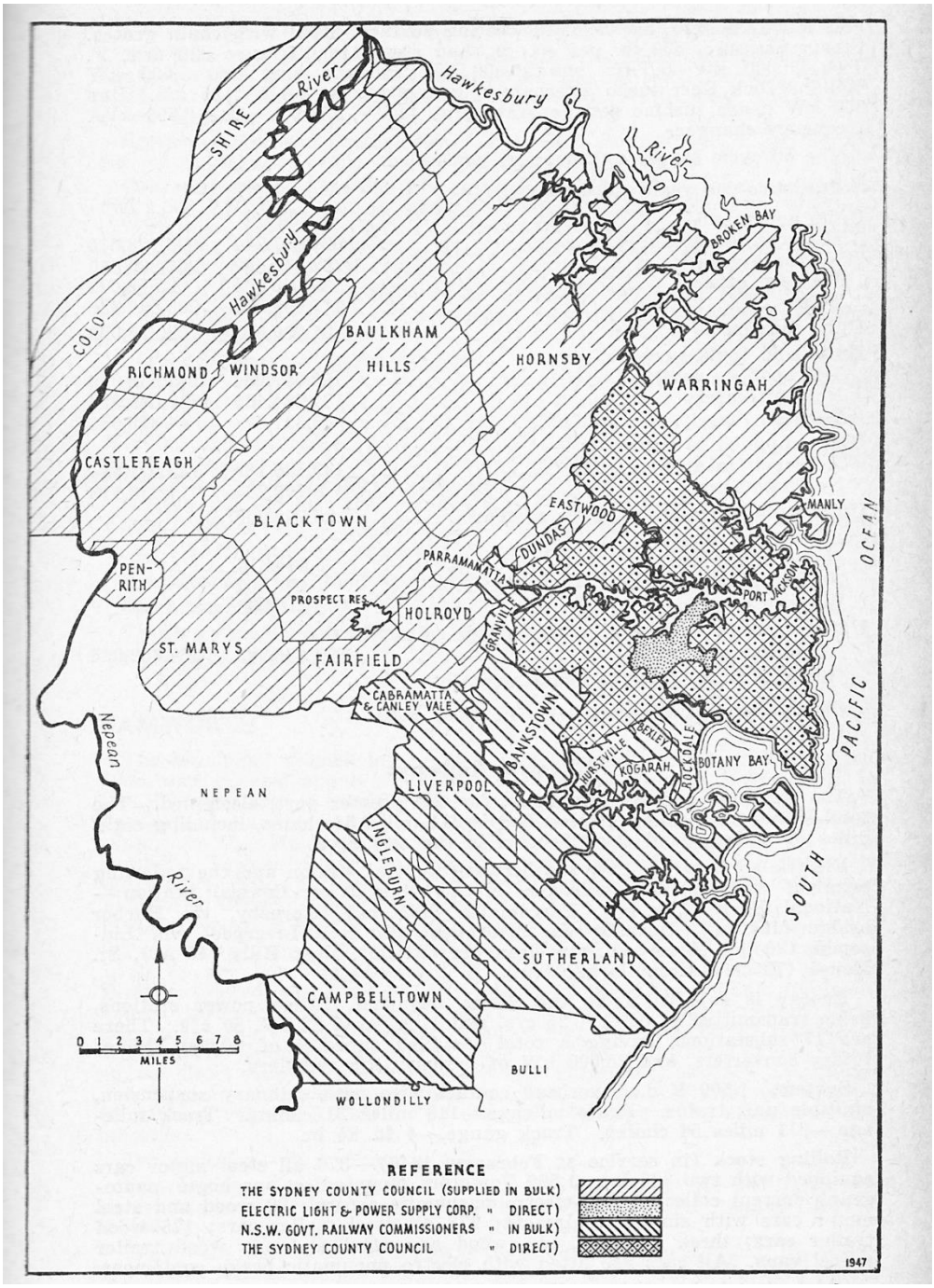

Figure 2.2 Districts supplied by major authorities in the Sydney metropolitan area and environs.
Source: *Tait's Electrical Directory of Australia and New Zealand: The Electrical Handbook*, (Melbourne: Tait Publishing Company, 1948). 86.

Consumers in regional and rural NSW bought electricity, where it was available, from local government authorities that generated their own or purchased it from the NSWGR, the Department of Public Works (PWD), other municipal generators or private providers

(see Figure 2.3). Each small generating authority owned and operated their own network with interconnections between networks non-existent, or in the case of the NSWGR and the Department of Public Works in 1948 only two interconnections existed. Both interconnections, Cowra to Orange to the west, and Port Kembla to Sydenham in the east were at sixty-six kV and not the higher capacity 132 kV.[3] Equally important is that there was little coordination of planning, production or maintenance activities between authorities.

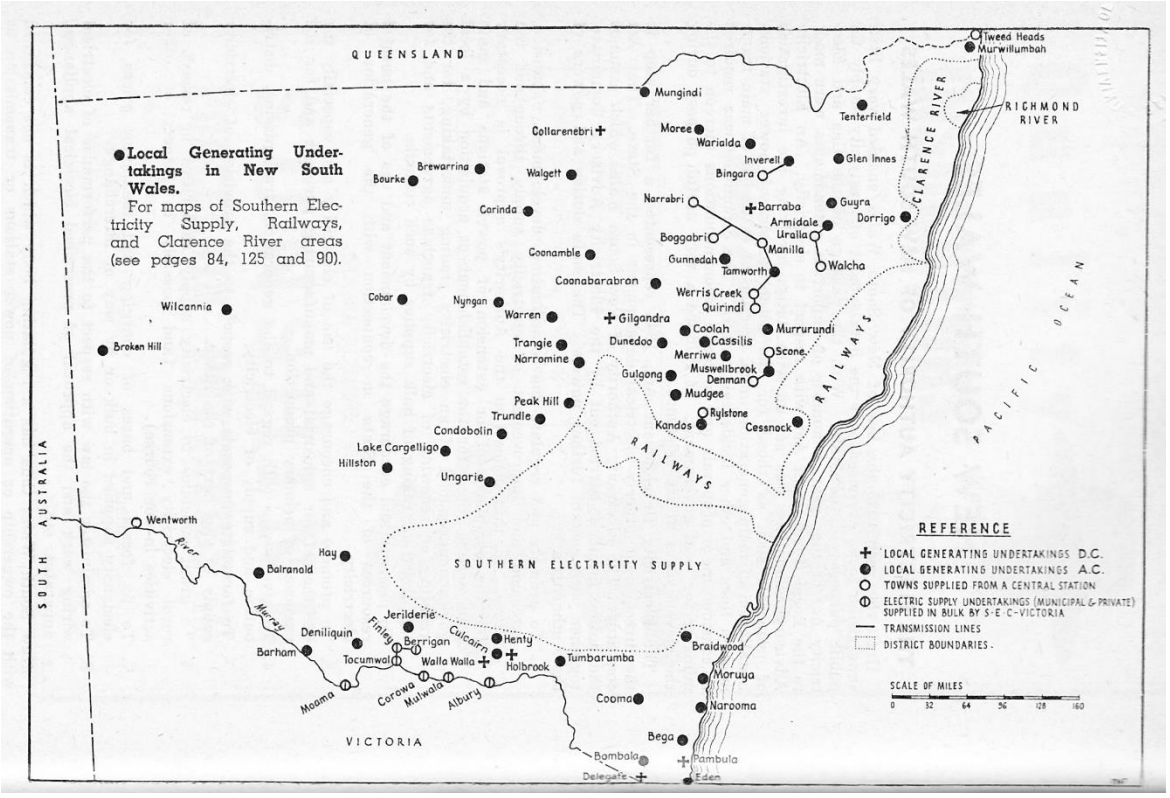

Figure 2.3 Local Government electricity supply authorities and general location of major networks external to Sydney
Source: Source: *Tait's Electrical Directory of Australia and New Zealand: The Electrical Handbook*, (Melbourne: Tait Publishing Company, 1948). 125.

[3] *Report of the Department of Public Works for the Year Ended 30th June 1942*: 1942, 22.

Municipal trading

Many terms have been used to describe this fragmented arrangement. Examples include ‘colonial socialism’, ‘municipal enterprise’, ‘municipal capitalism’ and ‘municipal socialism’.[4] Whichever term is used, all have at their core, similar connotations of government intervention at state or municipal level in the provision of services. Apart from governments having access to adequate finance for capital works, one rationale for government provision of water and electricity services for much of the twentieth century was that the services were viewed as critical to the community. Further, they were also seen as natural monopolies, and importantly, tradeable as commodities. Accordingly, rather than characterising the public provision of these services as a form of socialism, or other ideological term, state or municipal trading activities are more appropriate terms.

At an ideological level, debate on the public provision of services was and continues to be significant. In the late 1940s, the existing state and local government generating authorities were unable to ensure a reliable supply. Consequently, the takeover of the four major authorities by a single large public statutory authority was primarily a pragmatic exercise to resolve a critical technical issue, although electoral pragmatism in the lead-up to the 1950 state election would have influenced the Labor government’s actions. V.H. Treatt, the leader of the Liberal opposition, considered takeover as a socialist ploy aimed to remove control of electricity from local government, a “political subterfuge” and “political immorality.”[5] Ironically, in 1997, the Labor Party was challenged by an ideological quandary of public or private ownership of essential services when confronted

---

[4] John Hirst, *State Socialism*, ed. Graeme Davison, et al., Rev. ed., The Oxford Companion to Australian History (South Melbourne ; New York: Oxford University Press,, 2001). Stefan Petrow, "Municipalisation in Australia: The Case of Launceston 1880-1914," *Australian Journal of Politics and History* 56, no. 4 (2010): 521-39.

[5] New South Wales: *Parliamentary Debates*. 30 March 1950, 5680 (V. H. Treatt, Leader of the Opposition).

by a Labor Premier and Treasurer proposing privatisation of the electricity generation industry.

At an enterprise level, pragmatic managers and employees of public utilities, after acknowledging their part in a primarily engineering enterprise, would, more than likely, consider themselves as employed by a state or municipal organisation engaged in the provision of a service or commodity. Few would consider they worked in a socialist environment.

While the major pre-1950 electricity generating authorities exhibited the phases of the modified model of system development to varying degrees, two prominent regional systems also illustrate the evolution of small isolated plant to their eventual incorporation in a larger *coordinated regional system*. The first, the Tamworth system in northern NSW, developed from a small isolated plant to being a large isolated plant as part of an uncoordinated individual system. The Tamworth Borough Council's 1888 Peel Street installation comprised two 18 kW direct current (DC) steam driven generating sets. The initial DC network was restricted to a supply area of 1.3 km radius of the power station.[6] A larger power station (output of 28 MW in 1957) was established in 1922. (see Figure 2.4.)

---

[6] Ian R. Lobsey, *City of Light: a History of the Tamworth Electricity Undertaking and Peel-Cunningham County Council 1888-1988* (Tamworth [N.S.W.]: Peel-Cunningham County Council, 1988). 29-31, 63.

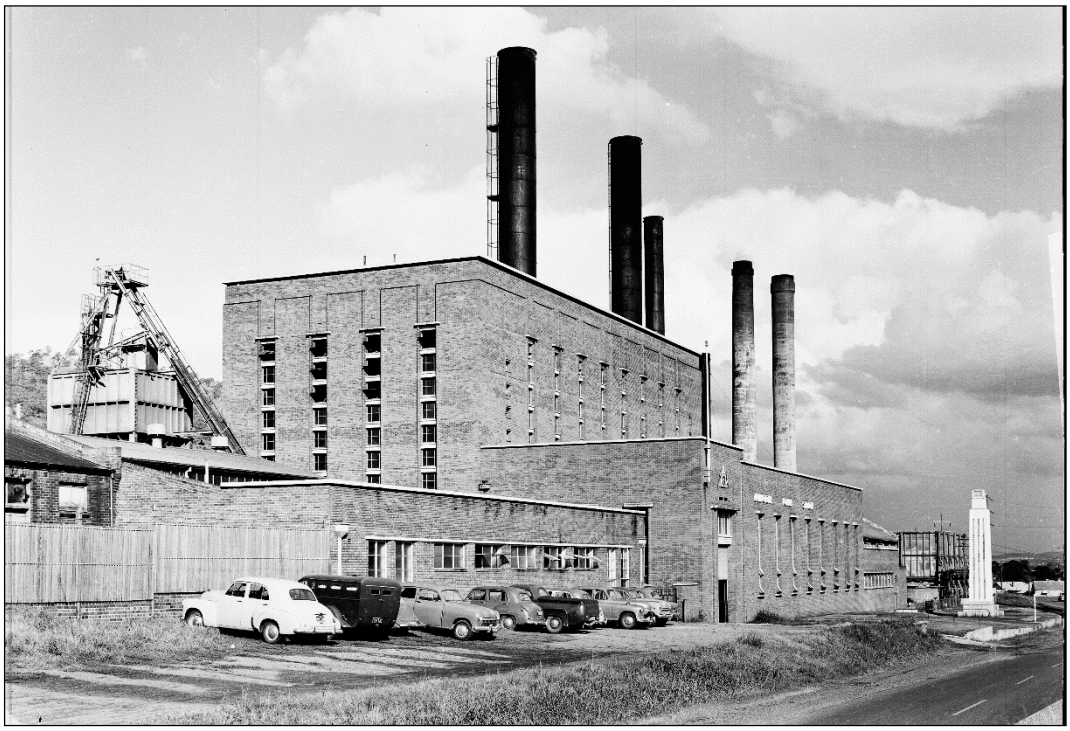

Figure 2.4 Tamworth Power Station – 1957 (ECNSW 01066)

Although the Tamworth electricity network had been extended to cover much of the New England area, it remained separated from the rest of the state until late 1958. In the early 1950s, the design and initial construction of a new 30 MW station at Gunnedah were undertaken to add to the Tamworth's network's capacity. This station, however, did not eventuate as the County Council was unable to gain the required funding, and more importantly, Tamworth's north-western NSW network was connected to the Electricity Commission's coordinated regional system in 1958**.**

The second example of individual system development is that operated by the Department of Public Works (PWD). The Department's role as an electricity generator began in July 1914 with the commissioning of two 0.3 MW AC generators at Port Kembla Power Station (see Figure 2.5). Originally constructed to supply power to Port Kembla's coal loading facility, its role quickly changed to one of a central power station. In terms of Casazza's model, Port Kembla operated as a large isolated plant providing bulk power to the Municipality of Wollongong and a number of other municipalities on the NSW south coast. Bulk supply arrangements with other state owned activities and local government municipalities followed. In 1918, the transmission line originally

commissioned for the construction of Cordeaux Dam was extended to Avon Dam and in 1923 to the Municipalities serving Mittagong, Moss Vale and Bowral. A southern extension from Port Kembla reached Kiama in 1923/24 and Nowra and Jervis Bay in 1926.

Figure 2.5 Port Kembla Power Station - 1952 (ECNSW 00032)

PWD's generation of electricity was not limited to the coal-fired station at Port Kembla. In 1928, a 10 MW hydro power station was commissioned at Burrinjuck Dam on the Murrumbidgee River (see Figure 2.6.) As with Port Kembla, Burrinjuck assumed the role of a central power station supplying bulk electricity to local government authorities in the southern portion of the state. Wagga Wagga, Cootamundra and Junee municipalities were supplied from Burrinjuck in 1928.

By the end of 1928, the basis of the PWD's two large isolated plants centred on Port Kembla and Burrinjuck had been established. Although extensions to these two stations

were commissioned over the following decade, they remained separated until defence considerations hastened their linking in the early years of the Second World War to form a single network.[7] As with other networks connected to the state's uncoordinated regional system, the PWD system operationally became part of the ECNSW's coordinated state system in May 1950. The ECNSW acquired formal ownership of the PWD system in November 1950.

Figure 2.6 Burrinjuck Hydro Power Station interior – 1959 (ECNSW 02082)

A focus on the major public and private generating authorities, however, does not present a complete picture of the NSW generation industry immediately before the establishment of the ECNSW. In the late nineteenth century, there were a number of instances of the generation of electricity by single generating bodies for their own use.

[7] This was often referred to as the Southern Electricity Supply.

The NSWGR, for example, installed electric lighting at its Redfern terminal in June 1882 and the Randwick Tramway Workshops in 1885.[8] Tamworth in northern NSW, however, is generally accepted as having established Australia's first municipal street lighting by electricity in November 1888.[9] Young, in southern NSW, did likewise in April 1889 and was the first to supply private customers. Other early electrical street lighting initiatives by local government authorities included Lambton in 1890, Penrith in 1892, Redfern and Newcastle in 1891 and Canterbury in 1898.[10] NSW Railways and Tramways' Ultimo Power Station (1899) at Darling Harbour, Sydney, was, however, the first major central power station commissioned in the Sydney metropolitan area, and the oldest transferred to the Electricity Commission control in the early 1950s.[11]

Population, electrification and demand

The growth of separate supply networks in the NSW fragmented system was primarily a function of increases in demand. Both average and peak demand were subject to multiple inputs. Among these, increasing population and the penetration of electricity as an energy source were significant. Between 1901 and 1954, the population of NSW increased from 1.36 million to 3.4 million.[12] As a percentage of the NSW population, Sydney increased from thirty-six per cent to fifty-four per cent. This increase matched an even greater increase, 370 per cent, in the geographical area of the "Sydney Metropolis."[13] These trends were indicative of the increasing suburbanisation of the city.

---

[8] L. I. Paddison, *Railways of New South Wales 1855-1955* (Sydney: Department of Railways, 1955). 110.

[9] Lobsey, *City of Light: a History of the Tamworth Electricity Undertaking and Peel-Cunningham County Council 1888-1988*: 44.

[10] Wilkenfeld and Spearritt, *Electrifying Sydney - 100 years of Energy Australia*: 123.; *Electric Power Generation and Distribution*: Australian Bureau of Statistics, 1953, 1157.

[11] Electricity Commission of New South Wales: *Annual Report of the Electricity Commission of New South Wales - for the period 22nd May, 1950, to 30th June, 1952*, 1953, 5.

[12] "Australian Historical Population Statistics," Australian Bureau of Statistics, www.abs.gov.au/ausstats/abs@.nsf/mf/3105.0.65.001. [Accessed 1 December 2008].Table 1.2

[13] Arthur Emerson, *Historical Dictionary of Sydney*, Historical dictionaries of cities of the world; (Lanham, Md.: Scarecrow Press, 2001). 433.

In an era before widespread use of private transport - initially trams, and later electrified suburban railways, had a major impact on suburban growth as urban areas developed close to existing and proposed rail and tram lines. [14]

Increases in Sydney's demand for electricity in the early decades of the twentieth century belie a different situation in regional NSW. While difficult to quantify, regional demand would have been increasing as local government and private suppliers commenced operations. The expansion of electricity into regional NSW, however, was slow. William Corin, the Department of Public Works' Chief Electrical Engineer (1907-1923), lamented in 1915, the "extremely backward position … as regards electric lighting in small towns."[15] This was the case despite the fact that regional towns such as Tamworth and Young were at the forefront of the public and private use of electricity. By 1915, forty NSW regional towns had electricity.[16] This compares with seventy-three in Victoria. On a per capita basis, however, Tasmania with just nine country towns electrified was well ahead of NSW.

The increase in population equated to an increase in potential end users as electricity progressively supplanted coal gas and other energy sources. In 1904, the year the first stage of Pyrmont Power Station was commissioned, the Sydney Municipal Council's (SMC) annual maximum demand was less than half a MW (0.457 MW). In its final year as an electricity generator, the SMC's successor, the SCC had a maximum demand of 297 MW.[17] Prior to 1910, some early industrial users, while willing to take advantage of the benefits of electricity to provide motive power for their various processes, were reluctant to outlay the cost of electric motors.[18] In an attempt to take advantage of this opportunity, the SMC instigated a motor hiring scheme. In 1907, for example, the Council had 361 DC

---

[14] Peter Spearritt, *Sydney's century : a history* (Sydney, Australia: UNSW Press, 2000). 31-56.
[15] William Corin, *Power Requirements and Resources of New South Wales*, ed. New South Wales. Department of Public Works (Sydney: Sydney: F. Clark Printing House, 1915). 13.
[16] ———, *Power Requirements and Resources of New South Wales*: 15.
[17] *Annual Report of the General Manager of the Sydney County Council for the Year 1951*. Table O, 37.
[18] Anderson, *Fifty Years of Electricity Supply*: 34.

and AC motors on hire, a 211 per cent increase on the previous year.[19] In contrast, the rate of penetration of electricity into the Sydney residential sector, however, was variable. The general trend of increasing electricity sales masked an underlying trend of a decrease in average energy sales per consumer between 1910 and 1925.[20] This trend steadied and reversed over the next five years as the SMC adopted a significantly lower domestic tariff structure. In the ten years to 1946, residential consumption increased 204 per cent, while industry increased 101 per cent.[21] In the following ten years, to 1956, Sydney's residential consumption, continued the previous trend and increased 157 per cent.

In the early years of the twentieth century, electricity for domestic use was initially limited to lighting.[22] Small items such as electric irons and kettles increasingly became the main electrical household appliances. As with the SMC's earlier initiative to stimulate the industrial market, from the late 1920s the Council actively promoted the use of electricity for domestic use. Existing home owners were encouraged to convert from other forms of energy while new home owners were encouraged to install an all-electric home. For example, a SCC advertisement in the *Australian Women's Weekly* of 10 July 1937, under a picture of a smiling homemaker, promoted:

> a new modern electric range installed free in your home – no deposit … with free installation and five years to pay … a dazzling new electric range of the latest approved type … with everything to make cooking easier, sure and economical – with everything to give you more time for rest and pleasure.[23]

To further promote the use of electricity, the SMC and its successor, the SCC established a number of showrooms and shopfront display windows. Figure 2.7, shows a

---

[19] *Report of the Municipal Council of Sydney*: 1904 - 1935. Year ended 31 December 1907, 8.
[20] Wilkenfeld, "The Electrification of the Sydney Energy System, 1881-1986," 166. Figure 4.4 Average Energy Sales per Consumer SMC, AGL, ELPSC AND SGCC 1904-1935.
[21] ———, "The Electrification of the Sydney Energy System, 1881-1986," 258. Table 6.5 - Electricity Consumption by Sector and per Capita - Sydney and the Rest of NSW 1936-1986.
[22] Spearritt, *Sydney's century : a history*: 53.
[23] "Cook by Electricity", *Australian Women's Weekly*, 10 July 1937.

SCC Cooking Presenter demonstrating the benefits and use of electrical kitchen appliances.

Figure 2.7 SCC cooking demonstration - 1961 (ECNSW 03478)

Figure 2-8 shows a SCC shopfront window display with a heading of ‘Live Better Electrically’ and explaining that seventy-five per cent of new homes in its franchise area are all-electric.[24]

[24] The SCC's 'Live Better Electrically' promotion is similar to the promotion of the same name run by US company General Electric in the 1950s. Hirsh, *Technology and transformation in the American electric utility industry*: 51-56.

Figure 2.8 SCC ‘Live Better Electrically’ window display - 1960 (ECNSW 02523)

Promotions such as these were influential in increasing the domestic use of electricity. Large electrical appliances such as electric refrigerators increasingly became a feature of most dwellings after the Second World War and by the mid-1960s electricity had supplanted coal gas as the preferred form of energy for cooking.[25] In time, other domestic labour saving devices dovetailed with modernisation and suburbanisation.

By promoting the use of electricity and the subsequent growth in demand, the generating authorities were attempting to resolve the critical technical issue (and by inference an economic issue) of the underutilisation of the installed generating capacity. Low system Capacity Factor, as this situation is termed, was initially an issue related to the low daytime utilisation of generating facilities originally installed to supply the night time public and private lighting load. A similar situation existed in later years, as electricity authorities promoted the use of electricity in order to fully utilise the larger generating units installed to meet the increasing daily and yearly peak demand. A

[25] Geoffrey Blainey, *Black Kettle and Full Moon: daily life in a vanished Australia* (Camberwell., Victoria: Penguin/Viking, 2003). 60. Spearritt, *Sydney's century : a history*: 53.

comparable quandary, the efficient utilisation of installed generating capacity, faces electricity generators in the twenty-first century. As with earlier periods, electricity producers are encouraging consumers to modify their consumption behaviours. In contrast to the earlier period, 'use less electricity' in peak demand periods is the new mantra.

Three important electrical engineers

While technical and non-technical issues were crucial to the development of the NSW electricity generation and transmission industry prior to 1950, they were resolved by people. Of the thousands of public servants employed in the industry, including electricians, steam turbine attendants, typists and industrial chemists, several senior managers, made significant contributions to the development of the industry during this period. While each championed their own authority's interests, all oversaw growth in generating capacity and electricity sales. Hugh R. Forbes-Mackay, the SMC's City Electrical Engineer (1908-1935), and General Manager of the SCC (1935-1939) is notable for his long tenure as a prominent engineer in Sydney's electricity generation industry.[26] During this period, he oversaw a 4,169 per cent increase in the Sydney Municipal and County Council's installed generating capacity.[27] The SMC / SCC's customer base increased from 1,000 to 250,000, and maximum annual demand on their network from 2,415 MW to 163,000 MW. [28] With the formation of the SCC in 1935, Forbes-Mackay was responsible for the transfer of £22 million of assets and 2,400 employees.[29] Impressive as these achievements may be, in the context of future developments in statewide supply of electricity, Forbes-Mackay is notable for his advocacy of the franchised local government production and supply of electricity.

---

[26] Wilkenfeld and Spearritt, *Electrifying Sydney - 100 years of Energy Australia*: 22-26. Tod Moore and James Walter, "State Socialism in Australian Political Thought: A Reconsideration," *Australian Journal of Politics & History* 52, no. 1 (2006): 11.

[27] *Report of the Municipal Council of Sydney. 1904-1935, Report of the General Manager of the Sydney County Council. 1936 - 1953*. (1909 – 6.7 MW, 1939 - 286 MW)

[28] "Famous Engineer Dead", *Sydney Morning Herald*, 21 October 1940.

[29] Wilkenfeld and Spearritt, *Electrifying Sydney - 100 years of Energy Australia*: 81.

Possessing a greater appreciation of the possibilities of geographically wide electricity network, Walter Harold Meyers, Chief Electrical Engineer of the NSWGR for over twenty years from 1924, was less well known. Apart from overseeing the initial electrification of the Sydney suburban railway network in the mid-1920s, Myer was an advocate for the expansion of the state's electricity resources on both a regional and state basis.[30] During Meyer's tenure, the NSWGR operated separate electricity networks based on Sydney, Newcastle and Lithgow. In addition to supplying Sydney's electric trains these networks supplied bulk electricity to local government authorities in the vicinity of the power stations. Meyer suggested that extensions to these networks, through further electrification of the state's railway system, was the best way to provide electricity to regional areas. Despite proposing a limit of a 120 mile (193 km) radius from Sydney, and not offering statewide coverage, this scheme would have, nevertheless, catered for a significant portion of the state's population.

In terms of the statewide development of electricity supply, the career of William Corin, the Department of Public Works Chief Electrical Engineer between 1907 and 1923, is also significant. By advocating the development of statewide generation and high voltage transmission, Corin's career highlights the critical role that politics and special interest groups played in the early development of the industry. Born in London in 1867, Corin became the PWD's Chief Electrical Engineer following twelve years in a similar position with Launceston City Council in Tasmania.[31] At both Launceston and the PWD, Corin was a strong advocate of hydro-electric power generation. In 1914-15, for example, Corin suggested that a dam and associated canal on the Snowy River at Jindabyne had the potential of providing 120,000 horsepower (approximately 90 MW) on a continuous basis.[32] In relation to the electricity networks that the PWD was to establish at Port

---

[30] ———, *Electrifying Sydney - 100 years of Energy Australia*: 30.
[31] K.R. Shedden, *Pioneering Hydro-electric Development in Australia : notes on the life and work of William Corin* (Taree: The Author, 1963). 2.
[32] *Report of the Department of Public Works. for the Year Ended 30 June 1915, 83*

Kembla (1925) and Burrinjuck Hydro (1928), and the transmission technologies then available, Corin further suggested,

> the distance of this water power from Sydney and the South Coast manufacturing district being well within the present commercial limits of electrical transmission, renders the possibility of development well worthy of future consideration.[33]

Corin returned to the subject of the Snowy's potential in 1919-20 where he argued that, for an initial outlay of two million pounds, 24 MW of electricity could be obtained from a run-of-the-river power station (no dam). This would be delivered via an 87 mile (139 km) transmission line to Twofold Bay on the NSW south coast.[34] Corin also estimated that such a scheme on the Snowy River could be expanded to 150 MW at a later date.

As important as Corin's advocacy of NSW' hydro-electric potential was, in the context of the overall development of the state's electricity supply industry his championing of the interconnection of all generation sources and load centres and the wholesale bulk supply of electricity are of greater significance. His initial 1911-12 report (prepared at ministerial request) outlined the staged development of a public power supply system to service the major population areas of the state. The scheme was to cover existing and future industrial, commercial and residential requirements. Significantly, Corin envisaged the scheme would facilitate the electrification of the state's railways, and the establishment in Australia of large electrothermal and electrolytic industries.[35] The system would interconnect thermal and hydro power stations to the major population centres. Corin's vision would not eventuate until 1942 in a rudimentary form, and as a fully interconnected centrally owned and coordinated system until the 1950s. In 1920 Corin promoted a network in which:

---

[33] *Report of the Department of Public Works. for the Year Ended 30 June 1915, 83*
[34] *Report of the Department of Public Works. for the Year Ended 30 June 1920, 86*
[35] *Report of the Department of Public Works. for the Year Ended 30 June 1912, 98*

> surplus power from all … sources could be supplied into one system of transmission mains under the control of a body appointed for the purpose with legislative authority to buy in bulk and sell in bulk at the lowest price consistent with sound finance.[36]

Prophetically, Corin's comment foreshadowed the post-1950 Electricity Commission interconnected system, or even the NEM of the late 1990s. His unsuccessful advocacy of a single statewide network utilising existing transmission technologies highlights both the status quo approach to industry development taken by the existing major generating authorities as well as the non-interventionist policies of successive state governments.

Of these three engineer managers of the fragmented industry period, Forbes-Mackay, Meyers and Corin, the latter was the more perceptive in recognising the need for a statewide interconnected electricity network that connected sources of production with load centres both large and small. Only through interconnections could production, transmission and distribution be coordinated to meet society's increasing demand for electricity. That his vision did not eventuate in his lifetime does not diminish his contribution to the industry.

Change on technical grounds defeated by absence of political catalyst

The path to commissioning William Corin's dream of a single statewide transmission system was long and littered with investigations, reviews, reports and recommendations. Sound technical drivers floundered on the political power of special interests groups, and the absence of a strong political catalyst for change. Nevertheless, and partly because of Corin's advocacy for a wholesale bulk electricity supply network, the Story Labor government in May 1920 established a committee to discuss and recommend legislation that would promote such a scheme.[37] The issues the committee was required to discuss included the control, ownership and operation of both generation and high voltage transmission assets. The government members on the committee were W.O. Brain

---

[36] *Report of the Department of Public Works. for the Year Ended 30 June 1920, 90*
[37] *Report of the Department of Public Works. for the Year Ended 30 June 1920, 90*

representing the NSWGR and Tramways, and Corin from the Department of Public Works. Representing local government were SMC's H. R. Forbes-Mackay and Newcastle City Council's Guy Allbutt. Representatives from the Caledonian and South Bulli colliery represented other bulk suppliers. At the conclusion of fifteen meetings, the committee recommended the establishment of a NSW Power Commission. Of the nine functions the committee suggested the new Commission have, the construction and operation of power stations proved to be the most controversial. [38] This had the potential of encroaching on the activities of all generating authorities, particularly those local government bodies such as the SMC, which had a substantial investment in the generation and sale of electricity to consumers. For the committee to make such major recommendations is perhaps not surprising given the strength of Corin's opinions and the NSWGR's primary function to supply its traction load rather than as a bulk supplier. However, the apparent absence of the SMC representative for the majority of the latter meetings is arguably the most compelling reason for the tenor of the Committee's final recommendations. After attending only a small number of meetings, Forbes-Mackay, the Council's representative, resigned his position, apparently at the direction of the Council. Given that Forbes-Mackay was the Council's Chief Electrical Engineer it is possible that his resignation was in protest at the overall direction the committee was taking. However, such reasoning seems unlikely given the SMC's investment in generating and transmission infrastructure.

Subsequent to the committee making its recommendations, the Minister for Public Works had the appropriate legislation drafted.[39] However, pressure of more urgent legislation before Parliament resulted in the Bill being stood-over until the next parliamentary session. Even then it was not presented to Parliament, and eventually lapsed with a change of government in 1925. Thirty years later, the Local Government and Shires Associations' 1950 opposition to a similar proposal (the formation of the Electricity Commission), hints at the political power of special interest groups. The

---

[38] *Report of the Department of Public Works. for the Year Ended 30 June 1921, 71*
[39] *Report of the Department of Public Works. for the Year Ended 30 June 1922, 70*

primary reason, however, that proposals to centralise the industry were unsuccessful in the 1920s, yet successful in 1950, centre on the state of the industry itself. To resolve the post Second World War electricity supply crisis, the State Government had a catalyst to counter the opposition of local government. In the earlier period, a crisis or catalyst for change did not exist – worthy intentions based on logical technical arguments were not sufficient to alter the status quo.

Fragmentation primarily an interconnection issue

Prior to 1941/1942, the physical fragmentation of the NSW networks rather than the separately owned and operated power stations characterised the nature of the NSW electricity system. Accordingly, coordination of generation and transmission expansion did not exist, nor did sharing of electricity supplies in normal and emergency situations. Electricity generation and high voltage transmission were centred on ten major separate systems. Of the three major systems in the Sydney metropolitan area – SCC, NSWGR and ELPSC – the SCC and the Sydney section of the NSWGR had rudimentary interconnections. Overall, the NSWGR operated three unconnected systems - Sydney and its traction services, a limited area to the west centred on Lithgow, and the Hunter and the Central Coast centred on Newcastle. The Public Works Department operated two unconnected systems – the first centred on Port Kembla and the second centred on Burrinjuck Dam. Of the remaining sizeable systems all were operated by local government authorities – Tamworth was centred on the New England area; Bega on the far south coast of NSW, and a number of smaller local government networks in the far north coast area of the state. These large isolated plants or uncoordinated individual systems are in addition to a multitude of small isolated local government and private power stations supplying towns scattered across regional NSW.[40] The absence of other interconnection between these and other networks meant that coordination of any kind did not exist. Figures 2.9 and 2.10 illustrates the major electricity networks before 1940.

---

[40] Wilkenfeld and Spearritt, *Electrifying Sydney - 100 years of Energy Australia*: 29.

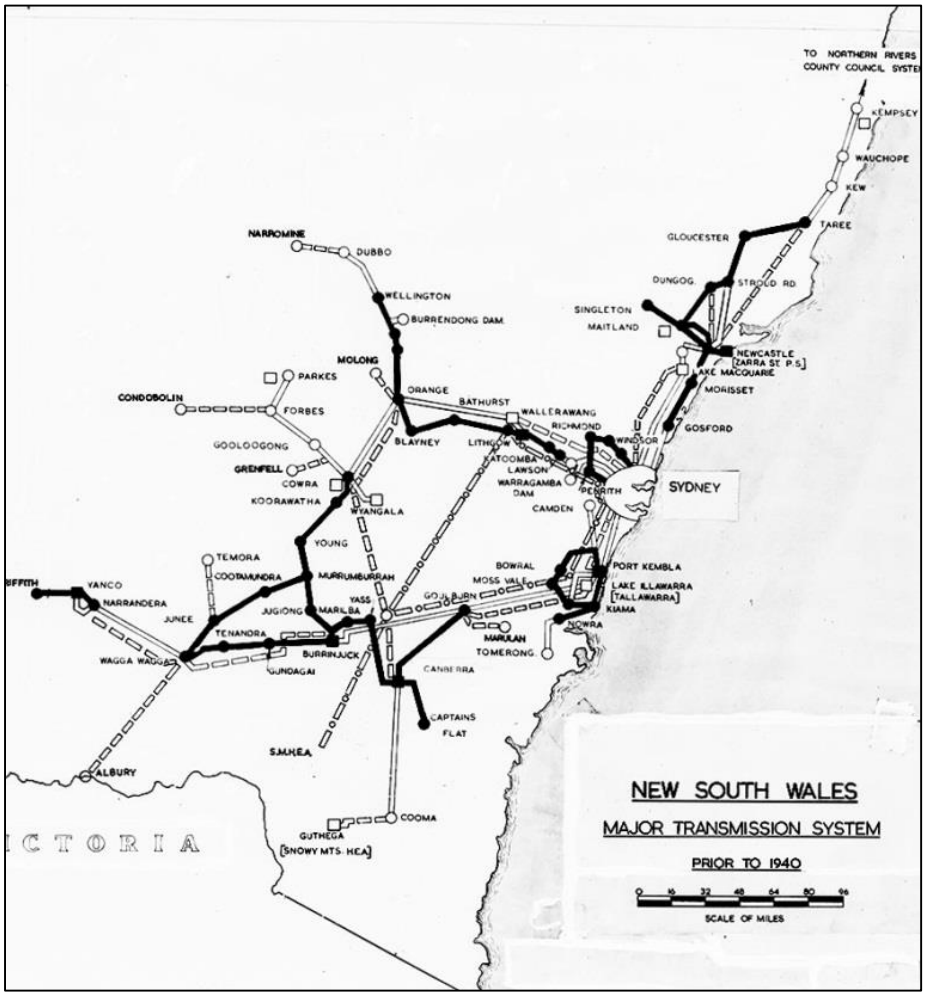

Existing power station (1940)
Future power station
Existing sub station (1940)
Future sub station
Existing high voltage transmission line (1940)
Future high voltage transmission line (1940-1950)
Future high voltage transmission line (after 1950)

Figure 2.9 Major transmission systems prior to 1940 (ECNSW 00098)

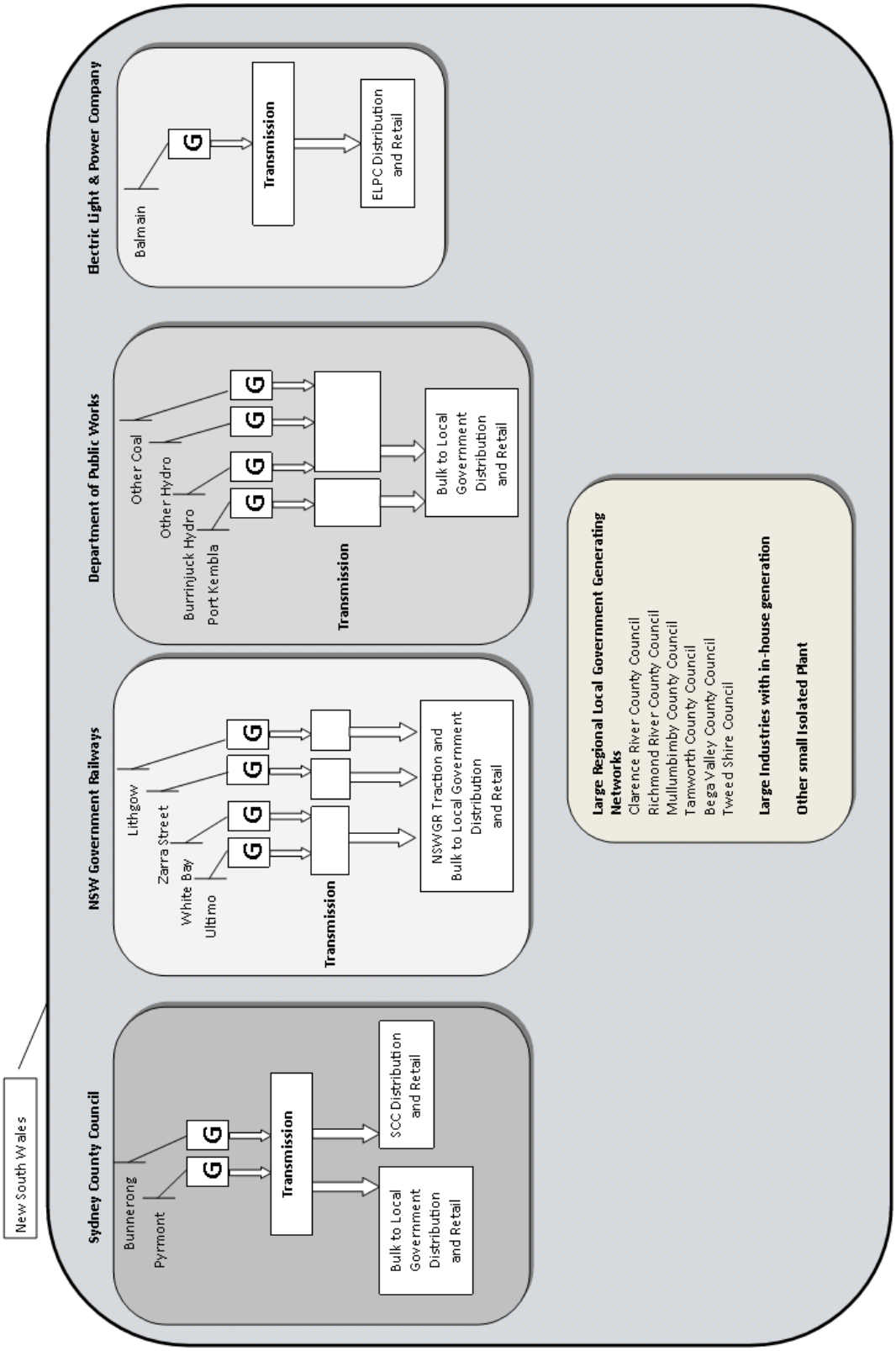

Figure 2.10 Fragmented NSW industry structures prior to the 1941 – 1942 Interconnections

Interconnection

NSW electricity authorities may have been mindful of Australian defence and security services' concerns in relation to the extent of alleged Japanese information gathering in Sydney and Newcastle dating from the 1920s and 1930s.[41] With the onset of war, the vulnerability of coastal power stations to attack from sea and air were identified as an area of concern. With the exception of Burrinjuck, Lithgow and Tamworth, the major NSW stations averaged six kilometres from the coast and all were within eleven kilometres.[42] Accordingly, defence considerations hastened the strengthening of the electrical interconnections between the major systems. As with other Australian electricity authorities, those in NSW implemented strategies to protect plant and equipment from enemy attack. Emergency management and communication procedures including controlling access to electrical facilities were activated in order to protect against potential sabotage activities.[43] The Department of Railways even considered, perhaps not too seriously, constructing an underground power station with coal reserves on top of the station.[44]

The PWD's western and eastern systems were interconnected in 1940-41. Balmain Power Station and the SCC system were interconnected in 1941, as were the NSWGR and Southern Electricity Supply systems at Cowra to Orange and Port Kembla to Sydney.[45] Also at this time, the Railway's northern system was connected to the Railway's fifty Hz Sydney system. Although many of these interconnections were of limited capacity, they nevertheless assisted in maximising the exchange of power in the

---

[41] Pam Oliver, "Interpreting Japanese activities in Australia, 1888-1945," https://www.awm.gov.au/journal/j36/oliver.asp. [Accessed 25 December 2014].
[42] Brain, "Presidential Address - Some Observations on Electricity Supply on the Australian Mainland," 123.
[43] D. P. Mellor, *The Role of Science and Industry*, Australia in the war of 1939-1945. Series 4, Civil (Canberra: Australian War Memorial, 1958). 218.
[44] "We Build a Power Station - Lake Macquarie," (Sydney: Electricity Commission of New South Wales, 1958), 5.
[45] *Report of the Department of Public Works. 1940-41, p 4*

years immediately after the war.[46] With these wartime interconnections, the foundations of the interconnected system of the early 1950s had been established by 1942-43.

Figure 2.9 also shows post-1940 interconnections and those envisaged for after 1952. Many of these interconnections were upgrades to existing transmission lines or duplications to assist in load capacity and security. Figure 2.11 illustrates the major network interconnections in 1950 and the year each was established.

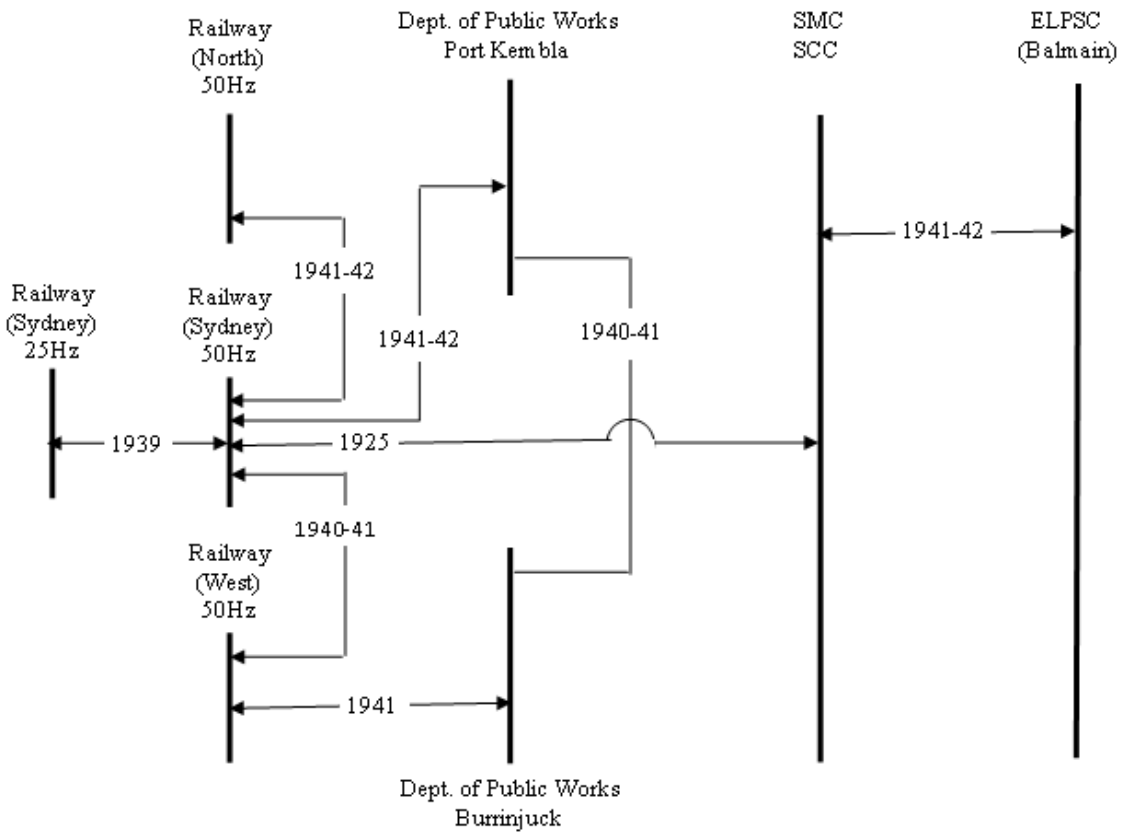

Figure 2.11 Major interconnections in 1950, and the year each was established.
(Tamworth, Bega Valley, Clarence River and Richmond River Systems not shown)
Source: Adapted by the author from *The Power Crisis in Australia, 1951*, Stewart Howard and Associates, Sydney. 85-90.

Despite the interconnections of the early 1940s, J.J. Cahill, the responsible Minister in the NSW Government, acknowledged that the fragmented, and uncoordinated nature of

---

[46] *A decade of progress: 1950-1960.*, 1960, 3.

the NSW network posed a critical problem to a reliable supply. In establishing the Electricity Authority in 1945, Cahill was primarily concerned with promoting industry coordination and rural electrification.[47] However, the Electricity Authority was not permitted to own or operate power stations, high voltage transmission or distribution networks. In effect, the increasingly critical nature of the NSW electricity supply crisis meant third party promotion of coordination and cooperation was destined for failure.

With the margin between demand and effective generation capacity drastically deteriorating after 1946, Cahill's first concrete steps to resolve this critical issue were the appointment of an Emergency Electricity Commissioner in 1949, and to centralise control of the state's four major generating authorities in 1950. Such an arrangement had previously been recommended on a number of occasions, notably by William Corin in the 1920s and by British consultants Rendell, Palmer and Tritton in 1937. In both instances, special interest groups, principally local government electricity authorities, coupled with a lack of political willpower at State Government level led to the continuation of the fragmented industry.

In light of the increasingly severe postwar power shortages, it may have been advantageous to have centralised in 1945 when the Electricity Authority had been established. If this had eventuated at that point, it might have, as it did five years later, brought new managerial expertise to critical issues that were resisting resolution by the policy makers and particularly the senior managers that had created them. As with other Australian states, and eventually NSW, centralised ownership resulted in improved operational and planning coordination of generation and transmission, that in turn hastened the return of reliable and secure electricity supplies.

Viewed from the perspective of the twenty-first century, and after seventy years of a single network, it is easy to overlook the significance early Electricity Commission senior management placed on a single, unified, statewide high voltage transmission network.

---

[47] Stewart Howard and Associates, *The Power Crisis in Australia, 1951*.: xxii.

Early Electricity Commission Annual Reports referred to it specifically as the 'Interconnected System'. Nevertheless, by the mid-1950s, after thirteen years of interconnection, the last five under ECNSW control, the novelty or uniqueness of this technical arrangement had waned and the pragmatic term 'supply system' began to be used. The contrast between the 1941/1942 technical configuration, and that of post-1996 highlights the significance of a single, unified network. In both periods, the production of electricity was at power stations owned and operated by separate utilities. Importantly, prior to 1941/1942, each transmission network was owned and operated by separate generating utilities; hence the term 'fragmented.' Despite multiple generating utilities in 1996, with a single, unified transmission network, and operational coordination, the configuration could not be characterised as fragmented.

Of the Australian states, Tasmania was the first to establish centralised control and ownership of generation and high voltage transmission. Queensland, South Australia and Western Australia followed in the 1930s and 1940s. In the case of Tasmania, the nature and location of the primary fuel sources were highly influential in the structure of the state's generation industry. Early Tasmanian power stations were privately owned hydro-electric schemes and supplied specific industrial businesses local to each power station. As such, lengthy transmission lines or interconnections to major load centres such as Hobart were not a feature. To supply the capital, the state owned Hydro-Electricity Department (HED) commissioned Australia's first major high voltage transmission line from Great Lake's Waddamana Power Station to Hobart in 1916.

As with Tasmania, the nature and location of Victoria's primary fuel source was critical in the early development of the state's generation industry. Before the First World War, Victoria's power plants were of the small isolated plant category supplying localised demand. Victoria's reliance on imports of NSW black coal prompted the colonial government in 1888 to offer subsidies for the development of Victoria's brown coal resources. The reliance on supplies from NSW was further highlighted when they were

were interrupted by the 1890 maritime strike.[48] In December 1918, the Victorian Government established the SECV to develop the state's brown coal deposits and hydro resources for electricity generation.[49] The Commissioners were also to investigate the statewide unification and coordination of electricity generation, transmission and distribution. The SECV's first brown coal power station was constructed in 1923 adjacent to a brown coal open-cut mine at Yallourn in the Latrobe Valley 100 km from the load centre of Melbourne. In opting for Yallourn, the SECV would have been mindful of the economic advantages of high voltage AC transmission over the transportation of large quantities of poor quality brown coal to Melbourne power stations.

The Tasmanian and Victorian experiences demonstrate that the location of the primary fuel source for power generation in the early decades of the twentieth century was critical in the structural arrangement that each state adopted. Individual private companies were reluctant to develop generation infrastructure other than for their own local requirements. At that time, only governments had the financial resources to develop large scale generation and transmission projects to supply both industrial and domestic consumers over a large geographical area. Centralised power authorities were established at an early stage in both states to manage the acquisition of fuel, electricity generation and its transportation over long distance to the major load centres. In contrast, in NSW it was both economical and practical to transport black coal to the power stations owned and operated by separate authorities in Sydney and other load centres.[50]

Technology equally important as politics and economics

Politicians, the media and other commentators on the industry often find it difficult to go beyond the political, economic, or organisational aspects of the industry. Nonetheless,

---

[48] Edwards, *Brown Power : a Jubilee History of the State Electricity Commission of Victoria*: 8-9.
[49] Victoria's reliance on supplies of NSW black coal was a critical issue, that had it not been resolved by the SECV's development of brown coal resources, would have hindered the development of Victoria's electricity industry.
[50] Victorian brown coal has approximately twenty-five per cent of the heating value of NSW black coal. This means that NSW generators require a smaller quantity of coal to generate the same amount of electricity as Victorian power stations.

the availability of appropriate technology was, and remains, central to the development of the industry, and meeting consumers' demand for electricity. The industry's technical intricacies, by their very nature, tend to be 'a closed shop'; the privy of industry insiders and then only of specific professions and trades. Nonetheless, these technical intricacies were in many instances of equal, if not greater, significance to the political and economic development of the industry.

Although the duplication of generating capacity is perhaps the most obvious inefficiency prior to the formation of the ECNSW, a lesser but equally technically flawed and uneconomical arrangement relates to the expansion or upgrade of the separate transmission networks. The NSW Railways, for example, in extending its 'poles and wires' network, would often traverse the franchise area of the SCC.[51] Often both authorities would run their underground or overhead cables in the same thoroughfare. To partly overcome this inefficiency, NSW electricity authorities would often enter into 'Joint Use of Poles' arrangements.[52] The primary reason for such an arrangement was to reduce the number of poles in public thoroughfares, and exhibit a degree of community focus and economic responsibility. As the NSWGR was a wholesaler of bulk electricity rather than a distributor, such an arrangement with non-generating county councils and shire and municipal councils was arguably a sound arrangement. However, 'Joint Use of Poles' arrangements between generating authorities loses sight of the technical waste and economic inefficiencies of multiple generating authorities transiting the same area with their transmission networks.

As is common with all electricity networks, then and now, the extent of overall capacity is largely governed by the maximum, or peak demand on the network, rather than the average demand. While peak demand occurs for a relatively short period each

---

[51] F.A. Bland, "Administration of Electricity," *Institution of Engineers Australia* 6 (1934): 35.
[52] New South Wales Government Railway Electrical Branch: *Annual Report ending 31 December 1937*, 1937, 20.

year, in a fragmented system, even one with limited interconnections, each separate generating authority had to install plant for that occurrence on its system.

In the early years of the twentieth century, a series of critical technical issues had the potential to hinder development of the industry. Prominent among these were the technical restrictions associated with limited coverage area of low voltage direct current networks. This restriction dictated that a power station had to be located in close proximity to the end user load.[53] Ultimo Power Station (1899), for example, supplying DC electric power to trams in Sydney's George and Harris Streets, was by necessity located adjacent to the Sydney CBD.[54] Resolution of this critical issue was achieved by the introduction of AC generation and high voltage transmission technologies.

Equally important was the early cost advantage of transporting black thermal coal to power stations in the Sydney metropolitan area versus the costs associated with the construction and operation of AC transmission lines conveying power from distant coalmine based stations. As a result, power stations at Pyrmont (1904), Balmain (1909) and White Bay (1912) were built close to the Sydney metropolitan load centre. This was also the case with Zaara Street Power Station (1919) which was constructed adjacent to the Newcastle CBD. As improved technologies for the transmission of high voltage AC over long distances became available, these cost-based issues increasingly lessened the requirement to build power stations close to the load. Nevertheless, for non-technical, often parochial reasons, the directors of Sydney's largest electricity authority, the SMC,

---

[53] In the late nineteenth century there was no economical way to change DC voltage levels. This meant that DC generators were connected directly to their load at the same voltage. Consequently, voltage levels were restricted to a low level of about 100 volts principally for safety reasons. As the distance between the generator and the consumer increased (over one to two kilometres), electrical losses increased which resulted in different voltage levels at different locations on the network. At the extremities of the network, voltage levels would be lower than that specified. DC motors would overheat and DC lighting would not provide the anticipated level of illumination.

[54] Don Godden et al., *The history and technology of the Ultimo Power House Sydney: a report for the Government Architects Branch, Public Works Department of New South Wales* (Sydney: NSW Department of Public Works, 1982). 26.

chose to construct its new Bunnerong Power Station (1929) within its metropolitan franchise area.

Over and above the major issue of the location of power stations, increases in electrical output from new plant and incremental improvements from new technologies were critical to industry's development. In the NSWGR for example, the maximum unit size at its White Bay station was 22 MW in 1925 and 50 MW in 1951.[55] The SCC's Bunnerong station experienced comparable increases over a similar period. However, additional research is required to determine if these increases in generating unit output were matched by improvements in employee productivity. Equally, improvements in technology were crucial. In the production of AC electricity for example, R.H. Parsons argues that without the late nineteenth century invention and implementation of steam turbine technologies, "the immense and efficient turbo-generating units, characteristic of modern power stations, electricity would have remained a costly luxury."[56] Notwithstanding this, the development of steam raising technologies (boilers) have arguably had an equal stimulus on the production of large quantities of electricity at low cost.[57] Many enhancements in boiler technologies, such as improved methods of fuel firing, and improved metallurgical process for the manufacture of boiler tubes contributed to the increasing the efficiency of the production process.

A major design feature of any boiler is the manner in which fuel is delivered into the boiler's combustion chamber or furnace. The initial hand-fired colonial type boilers (1899) and water-tube boilers (1902) at Ultimo employed a fixed firing bed on which large pieces of coal were introduced by hand and burnt as part of the combustion process.[58] The requirement to frequently open and close the fire doors to admit coal, and

---

[55] *Annual Reports of the Electricity Commission of New South Wales / Pacific Power.*
[56] R. H. Parsons, *The Early Days of the Power Station Industry* (Cambridge Eng.: The Universiy Press, 1939). 171.
[57] Sonia Yeh and Edward S. Rubin, "A centurial history of technological change and learning curves for pulverized coal-fired utility boilers," *Energy* 32, no. 10 (2007): 2003.
[58] Fetscher, *The Power Stations of the N.S.W.G.R.*: 2.

the subsequent intermittent in-rush of cold air interfered with an efficient combustion process. With the advent of Chain Grate Stokers at Ultimo in 1903 and Pyrmont in 1904, coal was mechanically fed onto a moving grate, thereby improving the efficiency of the combustion process.[59] The most significant technical improvement in boiler design, however, was the introduction of pulverised fuel firing (PF) at Ultimo in 1930.[60] In this process, coal is ground or pulverised into a very fine powder, blown into the combustion chamber of the boiler and burnt in suspension. The substantial increase in the effective surface area of the coal resulted in improvements in the speed and efficiency of combustion. As with previous improvements in fuel management, PF firing resulted in less coal being used to achieve the required boiler output, thus reducing production costs.

Parallel improvements in boiler design included the use of improved metals in boiler tubes. The resulting higher steam pressures, temperatures, and flows along with other advances in boiler design, enabled greater output, improved efficiencies and reliability. One significant consequence of improvements in boiler output and reliability was the elimination of the need to have multiple boilers supplying steam to single or multiple turbines. All the units at Bunnerong, Pyrmont, White Bay, Balmain, Zaara Street, Units One and Two at Tallawarra, as well as the first three units at Wangi, all employed the interconnection of multiple boilers supplying multiple turbines. All major power stations commissioned after the late 1950s were configured on the 'unit system' – a single boiler

---

[59] Chain Grate Stokers were one of the first technologies introduced to automatically introduce fuel into a boiler. In its most basic form, an endless chain or travelling grate is located at the bottom of the boiler furnace and forms the support or base for the fuel bed. The travelling grate, as with a conveyor belt, travels over a drive sprocket at one end of its travel and a return sprocket at the other. Fuel, generally coal, is fed by gravity onto the leading portion of the moving grate and transported into the furnace. Air is introduced from beneath the coal bed, with the newly introduced coal ignited from the fuel already burning. The speed of the travelling grate and the depth of the coal bed are regulated in order to control the rate of combustion and thus the output of the boiler. Babcock and Wilcox Company., "Steam : its generation and use, with catalogue of the manufactures of Babcock & Wilcox Limited," 9th British ed. (New York: Babcock & Wilcox Co., 1917). 198.

[60] Fetscher, *The Power Stations of the N.S.W.G.R.*: 6.

supplying steam to a single turbine. Again, these improvements were in response to critical technical issues related to the quest for higher electrical outputs from generators that in turn required higher outputs from boilers and steam turbines.

Conclusion

The Electricity Commission of New South Wales was a product of the interplay of social, technological and political influences prior to its formation in 1950. Seemingly continuous increases in demand, years of inaction by successive state governments to create a statewide electrical network, and a parochial attitude by much of the NSW generating industry, contributed to the industry not being prepared for the impact and aftermath of the Second World War.

The introduction of electricity generation technology into NSW was an evolutionary process. From the first rudimentary small isolated central generating plant at Tamworth in 1888 and the larger isolated Ultimo in 1899, continual increases in plant output, and technological improvements paralleled a seemingly ever increasing demand for electricity. The organisations that generated this electricity, predominately state and municipal authorities, were the product of preference for the public provision of tradeable services. Each had their own customer franchise area in which technology-imposed limitations initially dictated that the location of a power station be in proximity to the consumer load. Later as these restrictions were resolved, fuel transport cost advantages enabled the utilities to retain and extend their load-based generating assets. The long-term consequence of these early decisions was a proliferation of fragmented, local, often parochial, electricity generating authorities.

Within each fragmented authority, many high-ranking NSW Government and local government public servants were influential in the development of the industry. Notable among them is William Corin, the Department of Public Works' Chief Electrical Engineer (1907-1923). An advocate for hydro-electric generation, Corin is noteworthy for his championing of a wholesale bulk electricity supply network covering all NSW. Corin's vision was partially achieved in 1942-43, not for the technical and economic reasons that he had been advocating since before the First World War, rather, for the defence imperatives brought on by the Second World War. Corin was also an early

witness to the parochial special interests that hindered the development of a statewide electricity supply network. His advocacy of this project in 1920-1921, and the subsequent drafting of the relevant legislation foundered on the absence of a suitable political catalyst, and the government's inability to counter the vested interests of local government authorities.

Despite the limited interconnections between the major fragmented networks established in the early years of the Second World War, the incentive or political catalyst for the statewide unification and coordination of all aspects of electricity generation did not arise until the late 1940s as power restrictions and blackouts intensified. An industry's inability to provide a reliable supply of electricity and a perception of a voter backlash at a forthcoming state election prompted the government to centralise the industry and bring new managerial expertise to bear on the industry's problems.

While this chapter has explored the fragmented nature of the NSW electricity industry over a fifty-year period, the next chapter focuses in detail on the period 1940 - 1950. For the NSW electricity generation industry, this was a period dominated by the Second World War and the critical issue of the availability of new plant and equipment to meet the seemingly never ending increase in the demand for power.

Chapter 3 The Increasing Margin Between Demand and Supply 1940 -1950

Introduction

Confronted with increasingly severe blackouts and power restrictions, many consumers in postwar NSW would not have been overly concerned with how many electricity authorities there were, the number of network interconnections, or the extent of production inefficiencies. Restrictions on the use of electricity for domestic consumers meant cooking meals, even boiling water for a cup of tea, was often a matter of luck. Households fortunate to have a refrigerator had to contend with perishable foods defrosting when power was unavailable for long periods. In the winter months, restricted use of electric space heaters became the norm. A journey to work or school by electric train or tram was frequently a frustrating exercise, and once there the likelihood that the workday would be interrupted by lack of electricity was often high. The final inconvenience, at least for sporting fans, was that evening sporting events were likely to be cancelled. Lack of a reliable electricity supply, while perhaps not as crucial as in later, more electrified decades, nevertheless tested the patience of the domestic, commercial and industrial consumers in the mid to late 1940s.

From 1946, power restrictions and blackouts became frequent as the industry increasingly became unable to provide a reliable and secure supply. This situation arose through the interplay of causes ranging from a lack of coordination between generating authorities, new plant and equipment not being available, ageing plant, poor quality coal used in plant not designed for it, and lack of adequate plant maintenance. In addition, the industry's fragmented structure, and substantial increases in demand provided a backdrop to these unfolding issues. While the war time interconnection of the major networks provided limited opportunities to share resources, the lack of capacity was not restricted to one or two authorities, rather all had similar problems.

The previous chapter explored the development of the fragmented structure of the NSW electricity generation and high voltage transmission industry through the first half of the twentieth century. To further this exploration, the primary purpose of this chapter is to examine in greater detail the operational and political aspects of the industry in the

decade prior to the formation of the ECNSW in May 1950 with a focus on the increasing margin between the growing demand for electricity and the actual generating capacity to meet that demand.

While power restrictions and blackouts are technical in nature, invariably they have a political background. Accordingly, a key theme of this chapter explores the claim by the Minister for Local Government, J.J. Cahill that the major generating authorities, particularly the SCC, had failed to plan for the expansion of its generation capacity. Cahill's actions in 1945, 1949 and 1950 to resolve the NSW's power crisis were critical. Even so, the question remains as to why Minister Cahill took four years to take decisive legislative action to resolve the increasingly precarious state of NSW's power generating industry.

Supplementary themes consider the burden borne by consumers over many years of power restrictions and blackouts. Equally significant were the challenges engineers and other employees working in power stations experienced in the management and operation of often ageing, inadequately maintained generating equipment fuelled with poor quality coal.

The chapter concludes that local government authorities, with conservative political support, exerted their significant political influence in opposing the formation of a centralised authority to own and operate the state's generation and high voltage transmission infrastructure. Consequently, the Labor government was reluctant to centralise the industry until it could see clearly the political ramifications that could result from its inaction. Pragmatism based on the consequences of severe power restrictions eventually provided a political catalyst. Minister Cahill's assertion that the generating authorities failed to plan adequately for, and advance the development of the industry during the 1940s, is in part true. However, in the context of effects of the Second World War and the disruption to the availability of new generating plant from the United Kingdom, the generating authorities arguably were more victims that villains. Despite these political manoeuvrings, two groups - consumers, and industry employees - bore the burden and challenges of the increasingly severe blackouts between 1946 and 1953.

The increasing margin between demand and supply

The critical issue for the NSW electricity supply industry in the 1940s was a negative increase in the margin between the quantity of available electricity and the increasing demand. At the start of the Second World War, Australia had a total installed generation capacity thirty per cent greater than required to meet the peak loads of the various systems.[61] With a fifty-three per cent positive margin, NSW had ample supplies to meet current and short to medium term future demands.[62] Figure 3.1 illustrates the relationship between the maximum fifty Hz demand and the maximum attainable generation capacity for the winter of each year from 1940 to 1950.[63] As the war progressed, the healthy margin of 1940 steadily declined.

Demand increased 139 MW or forty-nine per cent in the five years to 1945, in line with population growth and as industry converted to defence related production.[64] In contrast, only 110 MW of new plant was installed, and all of that in the period 1940 – 1942. V.J.F. Brain suggests that without this large positive margin of reserve capacity, NSW would have been unable to "weather the stress of war."[65] The ECNSW's first Annual Report noted that the supply industry had been "living off its fat" during this period.[66] Without the margin, the shortages that eventuated from 1946 would have started much earlier, with significant negative impact on the NSW and Australian war efforts.

---

[61] Brain, "Presidential Address - Some Observations on Electricity Supply on the Australian Mainland," 123.

[62] The difference between supply and demand, the margin, is the quantity of reserve capacity that is available to cater for unexpected contingencies.

[63] *Annual Report of the Electricity Commission of New South Wales - for the period 22nd May, 1950, to 30th June, 1952,* 7.

[64] *Annual Report of the Electricity Commission of New South Wales - for the period 22nd May, 1950, to 30th June, 1952,* 7.

[65] Brain, "Presidential Address - Some Observations on Electricity Supply on the Australian Mainland," 7.

[66] *Annual Report of the Electricity Commission of New South Wales - for the period 22nd May, 1950, to 30th June, 1952,* 7.

The immediate postwar years were continuations of the trend of the previous five years. Rising demand matched a flat or falling trend in attainable generating capacity. Demand increased by thirty-one per cent while maximum effective generation fell by four per cent.[67] This was despite the commissioning of almost 100 MW (96.65 MW) of

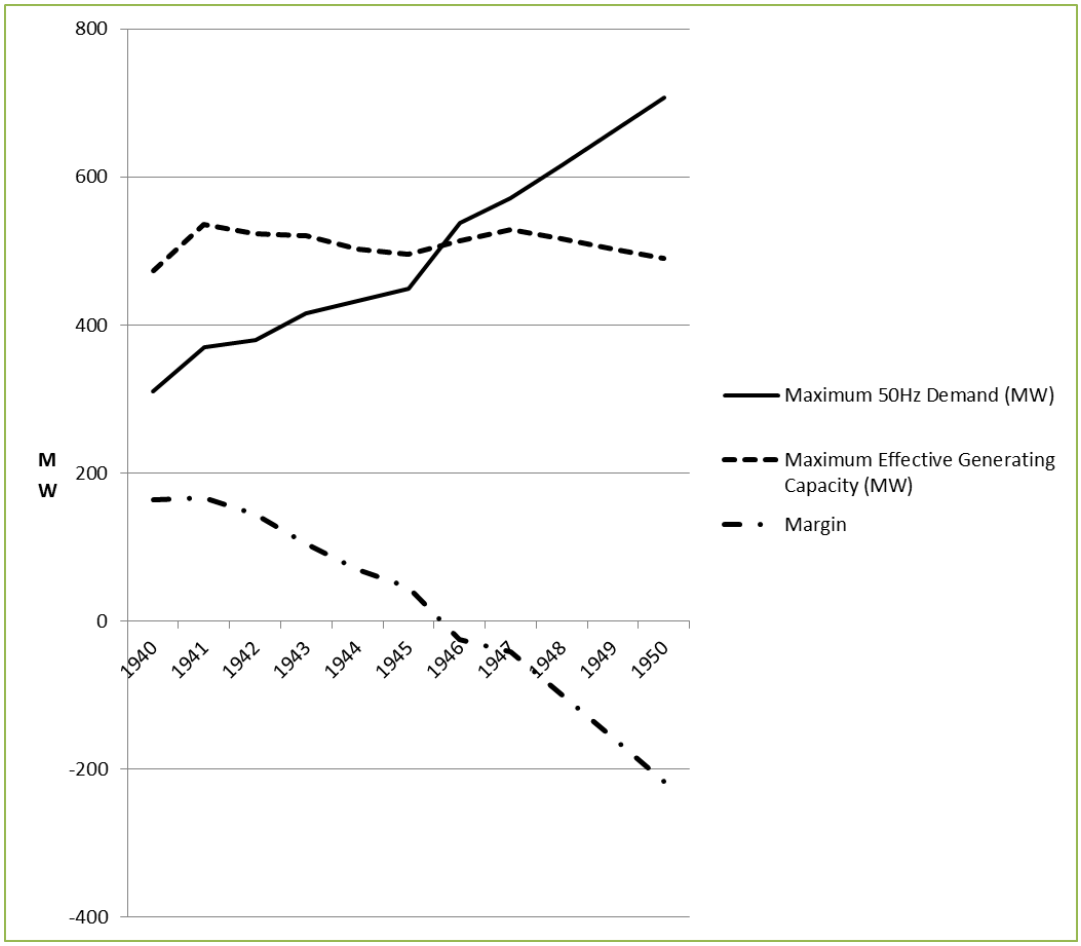

Figure 3.1 NSW maximum 50 Hz demand, maximum effective generating capacity and margin 1940 - 1950.[68]
Source: Data from: *Annual Report for the Year Ended 30 June 1952* (Sydney: Electricity Commission of New South Wales, 1952), 7.

---

[67] *Annual Report of the Electricity Commission of New South Wales - for the period 22nd May, 1950, to 30th June, 1952,* 7.
[68] In addition to its fifty Hz system, the NSWGR operated a twenty-five Hz system primarily to supply trams and part of Sydney's electric train network.

new plant in the five years to 1950.[69] In this period, it is unlikely that any, generating capacity was retired from service at the end of its normal life span. This implies that some generating plant was incapable of generating at full load. By 1946, any excess capacity in the system had been consumed. The margin moved into negative territory and continued to deteriorate until a thirty per cent discrepancy existed in 1950. This equates to the period of increasingly severe blackouts and power restrictions.

Inadequate forward planning, delays in the delivery of new equipment

In addition to a rise in the demand for electricity, delays in the manufacture and delivery of new generating capacity were crucial to the authorities ability to meet the demand. These delays are most evident in the tendering, construction and commissioning of the SCC's Pyrmont 'B' Power Station. The 200 MW Pyrmont 'B's design had been approved in 1941.[70] The SCC, however, held little hope that any orders would be able to be placed as the British Government would not allow prospective manufacturers to enter into any agreement that would hinder the British war effort. The requirement to source plant and equipment from seemingly unresponsive British manufacturers was a function of Commonwealth Government and British Empire trade policies. In addition, a seemingly blinkered preference for British technology provided obstacles to the generating authorities in considering suppliers from other countries, particularly the US. Nevertheless, the SCC eventually considered it prudent to invite tenders to ensure manufacture would be commenced when permitted.[71] Consequently, an order for the first of four 50 MW units was placed with British manufacturers International Combustion and Metropolitan Vickers in August 1944, two to three years after approval to do so. An order for a second unit was placed in April 1945.[72] Orders for the third and fourth units were placed in May 1947.[73] In anticipation of a reasonably early delivery date, civil works

---

[69] *Annual Report for the Year Ended 30th June 1952,* 24.
[70] Stewart Howard and Associates, *The Power Crisis in Australia, 1951*.: vii.
[71] *Report of the General Manager of the Sydney County Council*, 1951, 12.
[72] *Report of the General Manager of the Sydney County Council,* 13.
[73] *Report of the General Manager of the Sydney County Council,* 13.

were commenced in 1945 with expected completion in 1947. Mindful of the need to expedite delivery of the four generating units, the SCC belatedly established the position of Inspecting Engineer in London in that year to oversee the contracts. While the SCC's choice of the country of supply was restricted to the United Kingdom, by mid-1947 the SCC had arguably completed all that could be reasonably expected of it, at least at a procurement level. Nevertheless, when equipment for the first 50 MW generating unit arrived in 1951, it had to be placed into storage as civil works, commenced six years earlier, had yet to be completed. These were completed in late 1951 and the unit commissioned in July 1952; eleven years after approval of the specification and eight years after the tender acceptance.[74]

The accusations levelled at the SCC, by Minister Cahill, in the Second Reading of the Electricity Commission legislation, focused on the Council's inadequate forward planning, and in particular their inability to complete Pyrmont's civil works before the arrival of the plant and equipment.[75] Cahill acknowledged the difficulties the SCC had to contend with, nevertheless the acute situation of the electricity supply in Sydney clearly showed "that its [the SCC's] task [has] been beyond it and that corrective action is necessary."[76] In criticising the SCC, the minister was in part commenting on the sometimes ambiguous separation of powers between the elected Councillors and the General Manager and his managerial team.[77] While the Councillors appointed the General Manager and the Chief Electrical Engineer, that was essentially the extent of their influence on the construction and production functions of the SCC. Nevertheless,

---

[74] *Annual Report for the Year ended 30th June 1953*: 1954, 5.
[75] ———, *The Power Crisis in Australia, 1951.*: vii. "Electricity Bill Before Assembly", *Sydney Morning Herald*, 13 April 1950.
[76] New South Wales, *Parliamentary Debates*, "Electricity Commission Bill," Legislative Assembly, 12 April 1950, 5716-17 (Cahill, Secretary for Public Works).
[77] Wilkenfeld and Spearritt, *Electrifying Sydney - 100 years of Energy Australia*: 80-81. The Gas and Electricity Act 1935, that constituted the Sydney County Council, was ambiguous in describing the division of powers between the Councillors and the management team headed by the General Manager.

Cahill was critical of the Councillors for not having the technical expertise to oversee the Council's technical operations. Also, implicit in Cahill's criticism of the SCC was condemnation of the engineering management decisions of the General Manager and his senior managers. These groups of engineering managers, rather than the Councillors, were responsible for decisions relating to the location and ordering of new plant, and day-to-day operations including the exchange of electricity with other authorities. For Cahill, this group of managers were at the heart of the SCC's power problems, and he held them accountable for Sydney's power restrictions and blackouts.

Notwithstanding who was ultimately responsible, the Council and other generating authorities were victims of circumstances, arising from the Second World War. In fact, in the late 1930s, before the outbreak of war, the SCC had indeed anticipated that it would have to increase its generating capacity in the short to medium term. Accordingly, it did act and commissioned 75 MW of capacity at Bunnerong between 1937 and 1939, and an additional 50 MW in 1941.[78] These additions contributed to the state's positive supply margin at the start of the 1940s. For the remainder of the decade, however, wartime restrictions threw any further plans for expansion into disarray. In May 1950, when the Electricity Commission was established, the SCC had 250 MW of new plant on order – four 50 MW units for Pyrmont and a 50 MW unit for Bunnerong. The Department of Railways had nine units totalling 280 MW on order. The Department of Public Works had 15 MW, and the Electric Light and Power Supply Company 50 MW. Thus at the height of the power crisis, NSW generators had 580 MW of new plant on order.[79] The bulk (seventy-five per cent) of these new orders had been placed after the margin between supply and demand had become negative. This suggests that the generating authorities were not fully appreciative of the full extent of the supply issue, and more likely fixated on their own network and not the state network as a whole. Overall, it would appear to reinforce the image of a fragmented system with little coordinated planning.

---

[78] *Annual Report for the Year Ended 30th June 1952,* 24.
[79] *Annual Report for the Year Ended 30th June 1952,* 24.

An additional critical issue from Minister Cahill's perspective were those power station generating units that had passed their useful life expectancy. This issue "epitomised the problem that Cahill was facing and the impossibility of finding quick solutions."[80] In addition, problems were encountered with the availability of construction labour and building materials. The situation was further compounded by confrontational trade unions appeared bent on hindering efforts to resolve the power restriction and blackout crisis.[81] The focus of Cahill's frustration, however, was the slow progress of civil works at the SCC's Pyrmont Power Station. Once the Electricity Commission had been established, newly appointed Commissioner D.L. McLarty focused his extensive managerial and engineering expertise on Pyrmont's problems.[82] Whether the first Pyrmont generating unit would have been commissioned in 1952, had the SCC had been left to resolve construction and commissioning issues, is subject to conjecture. It is difficult, however, to deny the impact of new managerial expertise, and the ECNSW's overall impact on the latter stages of the Pyrmont project.

Operating in the crisis years

A focus on the critical equipment supply issues of the electricity industry in the 1940s has the potential to overlook the equally significant technical issues affecting the day-to-day production of electricity. Operationally, the effect of a shortage of effective generating capacity meant that existing plant had to be operated for extended periods at higher outputs. Again using the SCC as an example, Bunnerong Power Station was divided into two sections. The older 'A' Station (175 MW) had been commissioned in 1929, with its newest unit (25 MW) placed in-service in 1937.[83] In the period 1933 to

---

[80] Peter Golding, *They Called Him Old Smoothie: John Joseph Cahill: a belated biography of a rather exceptional politician* (North Melbourne, Vic.: Australian Scholarly Publishing, 2009). 200.

[81] ———, *They Called Him Old Smoothie: John Joseph Cahill: a belated biography of a rather exceptional politician*: 201.

[82] David Lyon McLarty was the first Managing Director of the State Dockyard in Newcastle.

[83] *Annual Report for the Year Ended 30th June 1952,* 24.

1938, Bunnerong 'A' had an average Plant Factor of eighty per cent.[84] Between 1939 and 1951, 'A' station's Plant Factor increased to eighty-eight per cent.[85] This indicates that this section of Bunnerong was required to work at ten per cent higher loads during the war and postwar period than in the previous five years. Indeed in 1939, 'A' station's Plant Factor was 100 per cent and in 1940, 102 per cent, indicating that, for those two years, the station was operating at full load or in overload. The consequences of a lack of sufficient generating capacity on the SCC's network was more marked in the newer Bunnerong 'B' station. In the period 1939 to 1951, 'B' station's average annual Plant Factor was ninety-eight per cent.[86] For eight of these twelve years, 'B' station operated at or above 100 per cent Plant Factor.

Compounding the requirement of plant and equipment to be operated at higher loads and for extended periods was the general age of the plant. Obviously Bunnerong 'B' (average plant age being seven years in 1950), was in the most advantageous position to meet the system demand, as evidenced by extremely high Plant Factors. The older Bunnerong 'A' station (average age twenty years) and the much older Pyrmont 'A' (average age twenty-eight years) were less able to contribute to the overall electricity demand, again evidenced by correspondingly lower Plant Factors.

Further complicating the operation of generating infrastructure, and thus plant availability, was the challenge of adequate plant maintenance. The generating authorities, ever conscious of the dire supply situation, at least on their own networks, were faced with difficult choices. The need to take plant out of service for maintenance had to be balanced with the requirement to keep plant in-service to maintain output. On the other hand, maintenance was often performed during summer months in an effort to ensure a

---

[84] In its 1951 Annual Report the SCC used Plant Factor as a measure to indicate the extent to which a power station's plant was being utilised. Plant Factor in this instance is thus a ratio of the maximum demand on the station to station's generating capacity, or the extent or degree to which the plant was operated.

[85] *Report of the General Manager of the Sydney County Council,* 37.

[86] *Report of the General Manager of the Sydney County Council,* 37.

more reliable winter supply. Obviously, if a plant breakdown forced a generating unit out of service, it had to be repaired, and the unit returned to service as quickly as possible. As the blackouts intensified, efforts were made to place a number of Bunnerong's decommissioned generating units into service. Nevertheless, two that were recommissioned required around-the-clock maintenance attention to keep them in-service.

Commenting on the blackouts and the condition of the SCC's generating equipment, the *Sydney Morning Herald* cynically noted, "whenever a cloud obscures the sun, the electricity supply fails in some part of Sydney."[87] Blackouts occurred without notice, and consumers had no way of knowing when power would be restored. The SCC's standard explanation for the blackouts and restrictions was that the war had delayed the commissioning of new plant, or that generating equipment was being overhauled in preparation for the higher winter demand. The *Sydney Morning Herald* questioned why it was necessary for all generating authorities to be conducting substantial overhaul programs at the same time. It concluded that "there appears to be a lack of coordination somewhere."[88] Sharing the burden, it surmised, was only a stopgap measure, with the public becoming increasingly critical of the SCC's inability to provide the quantities of electricity required.

The generating authorities and consumers' energy problems were further disrupted as industrial relations issues frequently hindered efforts to carry out plant maintenance. Nowhere was this more marked than at Bunnerong Power Station. In May 1945, for example, the SCC, in an effort to reduce the backlog of maintenance work, attempted to introduce shift work maintenance.[89] Maintenance staff refused, and the subsequent industrial stoppages severely affected the Council's ability to meet the demand for electricity. In parallel with these events, industrial action by coalminers resulted in a

---

[87] "Public Angry Over Blackouts", *Sydney Morning Herald*, 27 January 1949.
[88] "Public Angry Over Blackouts"
[89] D.J. Nolan: *Report of the General Manager of the Sydney County Council*, 1945, 9.

severe shortage of coal. The subsequent statewide power rationing over the 1945 Christmas period only exacerbated consumers' frustration with electricity authorities. Again, in mid-1949 coal was in short supply because of a seven-week strike by coalminers. The SCC warned, in early July 1949, that its coal stocks were nearly exhausted, and that while Bunnerong had some stocks of fuel oil, these were expected to be reserved to generate electricity for hospitals, water, sewerage and other essential services.[90]

In addition to electricity production being adversely affected by coal shortages, its quality was often less than that required for efficient operation of the boilers. V.J.F. Brain suggested that the reductions in production efficiency, MW output, and generating unit reliability, coupled with increased maintenance costs were significantly influenced by a lack of adequate supplies of high-quality steaming coal.[91] In part, this drop in quality was the result of a move from hand-hewn underground coal to an increasing use of machinery, the working of inferior coal seams, and an increased use of coal from open-cut mines.[92] An engineer who worked at Bunnerong Power Station in the late 1940s recounts that part of the station's folklore was that engineers were often unsure if some coal deliveries should be used as road fill rather than to fire a boiler.[93]

For the SCC, poor quality coal was particularly relevant for the stoker fired boilers at Bunnerong 'A'. These boilers were designed to burn coal with twelve per cent ash content, yet in early 1948, the ash content averaged seventeen per cent and peaked as high

---

[90] "No Power Within a Week", *Sydney Morning Herald*, 8 July 1949.
[91] Brain, "Presidential Address - Some Observations on Electricity Supply on the Australian Mainland," 124. Brain was the Chairman of the NSW Electricity Authority, and the Electricity Commission's first Vice Chairmen.
[92] Australian Coal Association, *Coal for the Eighties* (Sydney: Australian Coal Association, 1982). 10.
[93] Brady interviewed by Hamilton, October - November 1996.

as thirty per cent.[94] Under these conditions, the mechanical stokers could not feed coal into the boilers at a rate sufficient to maintain the required steam pressure, which resulted in the generating unit's output being restricted. Use of off-specification coal also resulted in damage to the boiler's internal surfaces in addition to excessive quantities of bottom ash that required the ash handling equipment to be operated in overload. These issues proved to be a vicious circle - the use of poor quality coal resulted in an increased requirement for maintenance that the SCC had difficulty in providing. Similarly, to increase the output of the Bunnerong units as a consequence of a chronic shortage of coal, and partly to compensate for poor quality coal, the SCC, in 1947, installed oil-burners on all boilers.[95] While an increase in output was achieved, it came at a cost. Excessive use of fuel oil in normal and overload operation on plant not designed for it often resulted in an increase in the requirement for maintenance. As with coal supplies, the availability of fuel oil was often of concern. During 1950, for example, the SCC had difficulty in obtaining adequate supplies as a result of a shortage of oil tankers.[96]

Burden of the blackouts

Consumers experiencing power restrictions and blackouts are generally not interested in the technical details of their predicament. They are more interested in when supply would be restored and what would be the effects of a lack of electricity. Some may have asked 'has the refrigerator defrosted'; 'how will I get to work'; or 'how will I be able to listen to *Blue Hills* (a popular weekday radio serial)'? By contrast, power engineers were vitally concerned with the technical issues leading to power restrictions or blackouts.

Throughout the drawn out postwar power crisis, all categories of consumers carried the brunt of the shortages. For residential consumers, sudden blackouts were doubly frustrating as they did not know when the power would be restored. A group of Canberra

---

[94] J.O. Cramer, ""Blackouts" May Go On for Two Years", *Sydney Morning Herald*, 2 February 1948.
[95] G.S. Boyd: *Report of the General Manager of the Sydney County Council*, 1947, 8.
[96] *Annual Report of the General Manager of the Sydney County Council for the Year 1950*: 1950.

homemakers commented that they believed that blackouts made it almost impossible to prepare meals for a specific time.[97] For these consumers, the most disliked feature of the blackouts was awaking, on a cold Canberra morning, to no electricity. Employer representatives commented in mid-1949 that power restrictions and blackouts resulted in losses of industrial output and employee wages and salaries.[98] To avoid the effects of daytime power interruptions, some employers resorted to implementing night time shifts. Even though that was aimed at maintaining production levels, it was often at a cost as many employee Awards specified penalty rate provisions for shift workers. In other instances, some employers elected to stand down employees in the event of a blackout.[99] For those businesses with production processes based on electrical heating, the loss of productive hours was often much longer than the actual period of the blackout. One engineering firm in the Sydney suburb of Mascot reported in March 1949 that its hardening and heating furnaces were powered-up at 5am to be ready for a 7:30 am start of production. [100] If a blackout occurred, the furnace temperature often fell to a level at which production could not commence when power was re-established.

Consumers, the *Sydney Morning Herald* suggested, had resigned themselves to the continuation of winter blackouts, but summer blackouts were unacceptable. Referring to the SCC, the *Sydney Morning Herald* noted an apparent lack of planning, and the overall electricity situation as “disgraceful and intolerable” and “represents the failure of the corporate institution where political consideration have interfered with practical administration.”[101] Such comments pre-empted Minister J.J. Cahill’s later comments that

---

[97] "Housewives Prefer Roster System to Blackout Plauge", *Canberra Times*, 10 July 1952.
[98] "Losses in Pay and Output Effect of Blackouts", *Sydney Morning Herald*, 15 June 1949.
[99] "Wage Cuts in Blackout - Metal Trades Ruling", *Sydney Morning Herald*, 21 May 1949.
[100] "Blackouts Causing Output Loss", *Sydney Morning Herald*, 29 March 1949.
[101] "Public Anger Over Blackouts", *Sydney Morning Herald*, 27 January 1949. "Power Blackouts Hit Everybody", *Sydney Morning Herald*, 25 January 1949.

resolution of the situation was beyond the capabilities of the SCC.[102] With little possibility of any form of redress for the inconvenience or financial loss, consumers had little sympathy for the SCC's difficulties. Whether consumers translated this lack of sympathy into anger against the State Government, is also difficult to determine. Nevertheless, the government believed it had as evidenced by its haste in legislating for the formation of the Electricity Commission in the weeks before 1950 state election.

The politics of blackouts and power restrictions

Four government initiatives – the Gas and Electricity Act (1935), the Electricity Development Act (1945), the appointment of an Emergency Electricity Coordinator in 1949 and the Electricity Commission Act (1950) - were significant in the formation of the ECNSW. The first, the Gas and Electricity Act (1935), was enacted principally to resolve issues related to the relationship between the SMC and its Electrical Department. The 1935 Act reconstituted the Electrical Department as a county council (SCC) supplying a number of Sydney municipalities, with each municipality having a representative on the Council's Board.[103] In addition, this Act established the Electricity Advisory Committee. For perhaps the first time, a NSW Government acknowledged that there had to be a coordinated approach to the development of electricity supply for all NSW and backed it up with legislation.[104] To extend or establish power stations and transmission lines, or a generating authority's franchise area, it became necessary to gain government approval via the Electricity Advisory Committee.[105] However, while agreements were made on peripheral issues such as the aggregation of some small generating and distributing bodies into the county councils, the committee achieved less than was anticipated. This was the consequence of the committee not having the authority to direct the generating authorities

---

[102] New South Wales, *Parliamentary Debates*, "Electricity Commission Bill," Legislative Assembly, 12 April 1950, 5717 (Cahill, Secretary for Public Works).
[103] Wilkenfeld and Spearritt, *Electrifying Sydney - 100 years of Energy Australia*: 78-80.
[104] State Records Authority of New South Wales, "Electricity Advisory Committee," http://investigator.records.nsw.gov.au/Entity.aspx?Path=\Agency\490. [Accessed 5 March 2010].
[105] *Annual Report of the Electricity Commission of New South Wales - for the period 22nd May, 1950, to 30th June, 1952,* 5.

to construct or extend their facilities. Parochialism and the vested interests of the large generators and distributors meant that the Committee was unable to achieve any worthwhile progress.[106]

On becoming the responsible minister in June 1944, J.J. Cahill quickly recognised that the NSW electricity supply industry was "suffering from years of neglect" and was "structurally in a shambles." [107] Over one hundred separate authorities had some form of responsibility for the supply of electricity in various parts of the state. The situation was exacerbated by having to rely on aged infrastructure that should have been retired from service. In addition, supply of the main fuel source, coal, was seemingly at the whim of the communist controlled Miners Federation.[108] Cahill's initial response, in November 1945, the second significant government initiative, was the introduction of the Electricity Development Act (1945). The main outcome of this Act was the establishment of the Electricity Authority of NSW. Among its objectives, the authority was charged with the role of "promoting and regulating the coordination, development, expansion, extension and improvement of electricity supply throughout the state." [109] As with the Advisory Committee before it, the Authority was not given powers to construct, acquire or operate any generating facilities; these functions remained with the separate generating authorities. Even at this early stage, Cahill was mindful of the state's responsibility to facilitate the delivery of electricity to regional and rural areas of the state and not only metropolitan consumers. Nevertheless, he appeared reluctant to confront the vested and parochial interests of local government authorities. A political catalyst for such action did

---

[106] Frank Brady, "Electricity Supply in N.S.W. - the First Century and Beyond," (Institution of Engineers Australia, Sydney Division, 1994), 12.
[107] Golding, *They Called Him Old Smoothie: John Joseph Cahill: a belated biography of a rather exceptional politician*: 184.
[108] _____, *They Called Him Old Smoothie: John Joseph Cahill: a belated biography of a rather exceptional politician*: 182.
[109] *Annual Report of the Electricity Commission of New South Wales - for the period 22nd May, 1950, to 30th June, 1952,* 7.

not exist in 1945. Five years of power restrictions and blackouts would elapse before Cahill believed he had sufficient political motive to centralise the industry.

By May 1949, the supply crisis had deteriorated to such an extent that Cahill was forced to appoint an Emergency Electricity Commissioner (the third significant government initiative) to coordinate strategies aimed at ensuring that the available supplies were used in the most efficient manner. The Commissioner, Harold Graydon Conde, an engineer with extensive experience in the generation industry, was the General Manager of the ELPSC, the operator of Balmain Power Station.[110] As Emergency Electricity Commissioner, Conde had powers to direct generation and distribution authorities to share the available electricity and, if required, to instruct them to cease supplying any area. In addition, he was required to advise Cahill on power restrictions and rationing, as well as strategies to ensure compliance. As a matter of urgency, Conde was to determine the "true nature" of the power crisis.[111] In doing so, all generating authorities were requested to assist him. If they did not, the government was prepared to "bring down legislation which will not only compel such compliance, but which will empower … [Conde] … to take control of the power stations out of their hands."[112] The tenor of this Cabinet Meeting minute clearly indicates that Cahill and the government had little faith in the ability of the various generating authorities to resolve the crisis and a growing commitment to confronting the political influence of local government.

Peter Golding and Sarah Vallance have suggested that Conde's efforts to alleviate the power crisis reinforced Cahill's view of the need for more fundamental reform. [113] This was to take the form of an "umbrella organisation" to control and operate the state's

---

[110] Sarah Vallance, "Conde, Harold Graydon (1898 - 1959)," Australian National University, http://adb.anu.edu.au/biography/conde-harold-graydon-9801. [Accessed 4 June 2008].
[111] New South Wales: *Cabinet Meeting Minutes, 2 May 1949*, 2.
[112] *Cabinet Meeting Minutes, 2 May 1949*, 2.
[113] Vallance, "Conde, Harold Graydon (1898 - 1959)" [Accessed 4 June 2008]. Golding, *They Called Him Old Smoothie: John Joseph Cahill: a belated biography of a rather exceptional politician*: 202.

generation and transmission facilities.[114] In the event that a central authority was to be established, the Cabinet Minute specifically notes that Conde was to be "favourably considered" to head it.[115] Nevertheless, the decision to appoint Conde as Chairman of the Electricity Commission proved controversial. Many considered that a person from the SCC, the largest of the major generating authorities, should have been appointed to such a pivotal position. Considering the situation in which Cahill found himself, these may have been precisely the reasons for Conde's appointment. If nothing else, it highlights J.J. Cahill's political acumen in recognising Conde's managerial and engineering capabilities.[116] As General Manager of the ELPSC, Conde's appointment also suggests that the government was mindful that an SCC appointee would likely continue the management and cultural approach that Cahill held responsible for the power crisis.

When viewed from the perspective of the severe blackout and power restriction environment of the late 1940s and early 1950s, criticism of the government's lack of early decisive action is arguably justified. However, in January 1946, at the time of the formation of the Electricity Authority of NSW, and despite the poor state of the industry, power restrictions were minor and the generating authorities appeared confident of resolving the issue. Addressing the inaugural meeting of the Electricity Authority, Cahill suggested the Authority act in such a manner as to gain the confidence of the local government bodies, and suggested that they offer assistance to local government bodies in their efforts in rural electrification. There was no specific reference to the state of the generation industry.[117] It was only in 1949, with the power crisis at its height that the

---

[114] _____, *They Called Him Old Smoothie: John Joseph Cahill: a belated biography of a rather exceptional politician*: 202.
[115] *Cabinet Meeting Minutes, 2 May 1949,* 2.
[116] Prior to his appointment as Emergency Electricity Coordinator and the Chairman of the Electricity Commission, Conde had been General Manager of the Electric Light and Power Supply Corporation. In 1945 Prime Minister Chifley requested Conde to investigate the demobilisation of service personnel.
[117] Electricity Authority of New South Wales: *Minutes of Meeting*, 1946 -1979. 31 January 1946, (4185, 6/11906) 6.

government was prepared to confront the vested interests of local government authorities. For their part, local government electricity undertakings were anxious to protect their considerable investment in production and transmission assets and, by inference, their political influence. Many looked to the Victorian experience where the SECV had progressively taken over all utilities until the powers of the local government authorities had been commandeered.[118] For nearly half a century, NSW local government authorities had prevailed. By 1949 and 1950, Cahill could not avoid taking decisive action. A double catalyst – the seemingly never ending power crisis and the impending state election – was at hand.

The decision to establish the ECNSW, the fourth significant government initiative, could also be viewed as a pragmatic, perhaps a 'spur of the moment' decision. Such a view was confirmed in May 1956 by Conde himself. By then ECNSW Chairman, he commented that "the circumstances of the postwar power emergency, rather than any planned course of development [was] responsible for the passing of the old system of separate generating stations."[119]

True as this may be, Conde, in true 'public servant' style, chose not to make any political comment and resorted to attributing the ECNSW's establishment solely to technical issues. Politically, however, the formation of the Electricity Commission was not a smooth, trouble-free outcome as Conde suggested. Three key stakeholder groups – the State Government, the Liberal opposition and local government - were vocal in the months and years prior to the Electricity Commission's formation. Those directly affected by power restrictions were more than likely not too concerned which authority supplied electricity, just that there was sufficient for their requirements.

---

[118] H.G. Carter, "Electrical Development in New South Wales: Discussion by Sydney Division," *Journal of the Institution of Engineers* 11 (1939): 313.
[119] Conde, *The Organisation of the Electricity Commission of New South Wales and an Outline of its Activities: a talk to the Royal Institute of Public Administration (N.S.W. regional group) on May 3, 1956*: 3.

While not specifically referring to the advocacy of William Corin in the 1920s, in introducing the Electricity Commission Act in March 1950, Cahill did note previous consultants' reports on the provision and coordination of electricity supply.[120] In 1937, the recommendations of British engineering consultants Rendel, Palmer & Tritton, included the development of the water resources of the Snowy Mountain area for electricity generation and the electrification of a number of intercity rail lines.[121] It was, however, their recommendation that a central electricity authority be established that proved the most contentious. In the consultant's view, the benefits of such an action included economies associated with a statewide approach to capital expenditure, uniformity of tariff charges, and regular and efficient supply to all consumers. In a similar vein in 1944, Queensland Electricity Commission's S. F. Cochran, also recommended a central authority. In an attempt to placate local government interests, Cahill stressed that it was not the government's intention to deprive local government of its distribution and retail functions. Nonetheless, the SCC and other local government generators were required to forego their generation capabilities. Even so, Cahill was mindful of the pressures confronting the SCC and other generating authorities. Nevertheless, he felt that each authority placed more emphasis on their franchise responsibilities than the need for cooperation and the development of the industry on a statewide basis.[122] Cahill left no doubt that that SCC's poor performance was at the heart of the state's problems.

Apart from the requirement to resolve the power crisis, an important aspect of the Electricity Commission legislation was the need to ensure the NSW interconnected system was ready to receive its share of the output of the Snowy Mountain Hydro-electric

---

[120] *Parliamentary Debates.* 30 March 1950, 5677-79 (J.J. Cahill, Minister for Local Government).

[121] Palmer & Tritton. Rendel, New South Wales. Dept. of Works and Local Government., and Vattenbyggnadsbyrån., Inquiries, Special Reports *Report on Electrical Development in New South Wales* (New South Wales: NSW Government Printer, 1937). xi.

[122] United Kingdom: Department of Energy, *The structure of the electricity supply industry in England and Wales: report of the committee of inquiry [appointed by the] Department of Energy*, 1976, 14.

Scheme from the mid-1950s. Cahill was of the opinion that the government was under a "direct obligation to place its house in order to be ready to disburse [the Snowy's] benefits to the people."[123] This initially involved the construction of a 132 kV transmission line from Canberra to Cooma to supply power for Snowy construction sites. Larger capacity transmission lines would subsequently be required to take the Australian Capital Territory's (ACT) and NSW's allocation of power from Guthega Power Station from 1955, and subsequent hydro power stations as they were commissioned. If a centralised authority had not been established, the Public Works Department's Southern Electricity Supply, with its proven expertise in long distance high voltage transmission line construction and operation, could have conceivably connected the Snowy to Canberra and Sydney. Such an option, however, did not fit with the government's overall agenda of resolving the power crisis by eliminating the industry's fragmentation.

Not surprisingly, the NSW Liberal and Country Parties headed the political opposition to the Electricity Commission. State Liberal leader, V.H. Treatt, called the Electricity Commission Bill a "political subterfuge" to divert attention from [the government's] failure to resolve the power crisis.[124] Treatt accused the government of rushing the legislation through Parliament. An opposition call for the legislation to be postponed until after the forthcoming 1950 state election in order to enable the electorate to vote on the issue was defeated on party lines.[125] In opposing the ECNSW legislation, the Liberal and Country Parties, were in part, defending the interests of local government, and particularly the SCC. Despite assurances from the government that distribution and retail functions would remain with local government, the Bill was labelled "political immorality," and a socialist ploy aimed to remove control of electricity from local government.[126] The use of the 'socialist' label and similar political rhetoric were not unusual in this period. Apprehension of the role of the Communist Party was a feature of

---

[123]

[124] *Parliamentary Debates.* 30 March 1959, 5679 (V. H. Treatt, Leader of the Opposition).

[125] "Electricity Bill Before Assembly".

[126] *Parliamentary Debates.* 30 March 1950, 5680 (V. H. Treatt, Leader of the Opposition).

the political scene. The Menzies' Federal Government had been elected five months previously, in part on its opposition to the Chifley Labor government's proposal to nationalise banking.[127]

Outside Parliament, the Local Government and Shires Associations were vocal in their opposition to centralised control. In a '*Statement of Views*,' the Association asserted that it was "completely and unequivocally opposed to the creation of [the] Commission."[128] It is obvious, however, that electricity supply was of secondary importance to a perceived attack on local government. The Association noted that:

> electricity control is the test which will determine the future of local government … it will decide whether local government is to be regarded as a partner in the Trinity of Government or just a 'Cinderella' doing only routine, unproductive and unspectacular jobs relegated to it by centralised authority.[129]

In defence of the SCC, its Chairman, Councillor J.O. Cramer, commented that the Council:

> feels that the setting up of a Commission to control the generation of electricity in this State is a further advance of Socialisation and in view of the popular verdict at the polls is not in accordance with public opinion and would be detrimental to the interest of the consumer.[130]

As contentious as the formation of the ECNSW may have been in 1950, it was but one major reorganisation of the generation industry by successive state governments in order

---

[127] David Lee, "The 1949 Federal Election: A Reinterpretation," *Australian Journal of Political Science* 29, no. 3 (1994): 518.
[128] R.T.C. Storey and J.M. Caldwell: *Statement of Views on Proposal of the State Government to Create a Commission for the Control of Generation of Electricity Supply.*, 1950, 1.
[129] *Statement of Views on Proposal of the State Government to Create a Commission for the Control of Generation of Electricity Supply.*, 16.
[130] J.O. Cramer: *Board Minutes Sydney County Council*, 1949, Minute No. 10586, 299.

to resolve critical issues of the day: the formation of the SMC in 1896 and its disaggregation in 1935 to form the SCC; the disaggregation of Pacific Power in 1995 / 1996; its demise in 2003; and the privatisation of the industry in the 2010s. These are all phases in the history of the industry over more than a century.

Significant as the postwar power restrictions were, consumers did not punish the Labor government by forcing it out of office for its handling of the crisis. The NSW Labor government was returned to office in the state elections of May 1947, June 1950 and February 1953.[131] In each election, electricity related issues would have had an impact. At the height of the power crisis in 1947 and 1950, Labor enjoyed electoral success – be it in the latter instance with the help of disendorsed Labor members. Eighteen months prior to the 1947 election, a six-week strike at Bunnerong Power Station resulted in severe power shortages and as a consequence an estimated 150,000 workers were stood down.[132] Industrial relations, including those in the electricity industry, featured heavily in the lead-up to the election. Despite these negative issues, Labor was returned to office on the record of achievements of the previous Premier, William McKell, and on a platform of it being in the best position to resolve industrial disputes. By the 1950 state election, having presided over five years of unsuccessful attempts to resolve the power crisis, Labor somewhat belatedly legislated to centralise control of electricity generation. This action, taken in the weeks prior to the June 1950 state election, was recognition by the government that its electoral prospects, in part, hinged on its willingness to act decisively.

The haste with which the legislation was forced through Parliament highlights the government's real intentions. Electoral success was an equally critical goal alongside resolution of the power crisis. Premier McGirr had reason to be concerned. Many considered him a poor leader, and that the government did not present a unified front to

---

[131] *Annual Report for the Year ended 30th June 1953,* 9.
[132] David Clune, "1947," in *The People's Choice : Electoral Politics in Twentieth Century New South Wales 1930-1968*, ed. Michael Charles Hogan and David Clune (Sydney: Parliament of New South Wales ; University of Sydney, 2001), 237.

the electorate.[133] Unfulfilled promises from the previous election were indicative of an underperforming government. In labelling the ECNSW legislation as “the old socialist recipe of government control and ownership,” and “party opportunism in pursuit of power,” V.H. Treatt, the Liberal opposition leader, was playing to the electorate’s fear of communism.[134] The Liberal solution to the power crisis was, however, lacklustre. It included improving the quality of coal used in the state’s power stations, completing power stations then under construction, but not addressing the fundamental problem facing the industry, its fragmented structure. By contrast, the Labor Party reminded voters that it had taken steps to resolve these issues through coordination of the industry.

Treatt and the opposition, however, had their own problems, which diminished their electoral appeal. In addition to an electoral redistribution that slightly favoured Labor, the Liberals’ poor relationship with their coalition partner, the Country Party, and Treatt’s inability to gather the anti-Labor vote proved fatal.[135]

Considering the frequency and severity of the postwar power restrictions, and other election issues, it is surprising that the electorate did not follow the *Sydney Morning Herald’s* call for a change of government in 1950.[136] In making that call, the *Herald* criticised a government that had “grown stale, arrogant and disunited”, and one that had not delivered on its promises. In the final election result, Labor was able to secure a majority on the floor of the Legislative Assembly with the aid of two disenfranchised Labor Party members and retain government.[137]

---

[133] _____, "1950," in *The People's Choice : Electoral Politics in Twentieth Century New South Wales 1930-1968*, ed. Michael Charles Hogan and David Clune (Sydney: Parliament of New South Wales ; University of Sydney, 2001), 269-95.
[134] _____, "1950" 292. "Electricity Bill Before Assembly".
[135] _____, "1950" 292.
[136] "Time for a Change in the State Government", *Sydney Morning Herald*, 16 June 1950.
[137] A disenfranchised (disendorsed) memeber of parliuament is one who has resigned or forced to leave their original political party.

John Joseph Cahill

During this period of increasing severe blackouts and power restrictions, the political resolution of the crisis was the responsibility of John Joseph Cahill (Secretary for Public Works, Minister for Local Government and Deputy Premier.) Cahill had been elected as a member of the NSW Legislative Assembly in May 1925. Despite a brief period out of parliament in the early 1930s, his political career lasted over thirty-four years. He was appointed Secretary for Public Works on the election of the McKell Labor Government in 1941, Minister for Local Government in June 1944, Deputy Premier in 1949, Premier and Colonial Treasurer in 1952, in addition to the Transport portfolio between 1953 and 1956, and Treasure in April 1959.[138] He died, in office, as Premier, in October 1959. As the responsible Minister from 1944, Cahill utilised his considerable political and administrative expertise to resolve the substantial issues facing the postwar electricity supply industry (ESI.) His task was compounded by his and the previous government's focus on war-related activities to the detriment of the state's essential infrastructure. His task was further exacerbated by the rising demand for electricity, ageing generating plant, ineffective planning and operational coordination between utilities, militant trade unions, and government departments and local government generating authorities protective of their generating activities. He witnessed the depths of the blackouts and power restrictions, and more importantly initiated critical legislative actions that would see the crisis resolved by May 1953. The Electricity Development Act, 1945, while consolidating many smaller electricity authorities and promoting rural electrification, was not successful in resolving the fundamental problem of the fragmentation of the ESI. Cahill's appointment of H.G. Conde as Emergency Electricity Coordinator in 1949, his carriage of legislation to establish the ECNSW in 1950, and the appointment of key executives paved the way for the restoration of reliable electricity supplies and initiated a transformation in the NSW electricity supply industry. While Golding correctly acclaims Cahill's role in

---

[138] "Mr John Joseph Cahill (1891 - 1959)," Parliament of New South Wales, Former Members, http://www.parliament.nsw.gov.au/prod/parlment/members.nsf/1fb6ebed995667c2ca256ea100825164/11f4aa1975e3b258ca256cb7007d0180?OpenDocument. [Accessed 29 August 2014].

resolving the supply crisis, H.G. Conde, and his new organisation warrant an equal, if not greater, slice of the credit.[139]

Conclusion

Three lines on a graph encapsulate the problems faced by NSW electricity consumers, electricity producers and the State Government between 1940 and 1950.[140] One line, representing consumers' demand for electricity, rose steadily throughout the decade. A second line, representing the maximum effective generating capacity, remained essentially unchanged throughout the period. The third line, representing the difference between demand and supply, indicates a fifty-three per cent excess of generating capacity in 1940, zero per cent in 1946, and by 1950, a thirty per cent deficiency.

From early 1946, the challenges the electricity supply industry and the State Government had been grappling with for five or six years became the burden of consumers as power restrictions and blackouts became increasingly frequent and severe. Lines on a graph, however, are a rudimentary indication of what happened to the NSW electricity supply industry in the decade and only hint at the causes of power restrictions and blackouts and the eventual formation of the ECNSW.

The effect of the Second World War on the NSW electricity supply industry effectively sounded the demise of electricity generation and bulk transmission by separate government departments, local government, and private organisations. Against a background of increasing demand, NSW electricity generating authorities were unable to install sufficient new generating capacity. The need for additional new capacity had been recognised by generating authorities in the early years of the war, however, British manufacturers did not accept orders for new plant until 1944 and 1945. Thus, J.J. Cahill's

---

[139] Golding, *They Called Him Old Smoothie: John Joseph Cahill: a belated biography of a rather exceptional politician*: 202.

[140] In the decade 1940 – 1950 annual maximum 50 HZ demand increased 128 per cent, while the annual maximum effective generation increased only three per cent. This equates to an increase in the margin over the period of negative 232 per cent. See Figure 3.1.

1950 claim that the power crisis was a consequence of inadequate planning during this period by generating authorities is not entirely warranted. Nevertheless, while additional generating capacity was required to meet the increasing demand, any new capacity would also mask existing inefficiencies, including ageing plant, duplication of assets, poor quality coal and the lack of adequate plant maintenance.

While Cahill's accusation of inadequate planning were made in the context of extended delays in the delivery of plant and equipment, his frustration focused on the SCC's failure to have Pyrmont's civil works completed prior to the eventual arrival of the first of the new generating units. The inevitable delays in commissioning of this equipment further delayed the eventual resolution of the crisis. These delays were indicative of a malaise affecting many sectors of the power industry. Industrial stoppages were disrupting the electricity and coal industries. Skilled labour was in short supply. Building materials, particularly steel products, were difficult to acquire. The SCC and other generating authorities cited these difficulties as leading contributors to their problems.

Despite these difficulties, much of the generating capacity installed in the early 1950s, some assisting in the resolution of the power crisis, had been ordered prior to 1950 and the formation of the ECNSW. Nevertheless, it was the ECNSW rather than the pre-1950 generating authorities that were awarded the public recognition for the resolution of the power crisis. With some notable exceptions, senior executives from the old generating authorities were not transferred to the ECNSW. This is a clear indication that the government considered the policies and attitudes of many senior managers had contributed to the initial problems and, in many instances, had proved incapable of resolving them, whereas those with new policies and attitudes were likely to have greater success. At an engineering and technical level, credit for the resolution of the blackouts rightly belongs to those personnel transferred from the old generating authorities.

In at least one respect, the resolution of the postwar power restrictions and blackouts was instigated before they had even begun. On becoming the responsible Minister in 1944, J.J. Cahill, became aware of the need to address the structural deficiencies of the industry. Even at this early stage, Cahill was mindful of the state's responsibility to

facilitate the delivery of electricity to regional and rural areas of the state as well as metropolitan consumers. However, he appeared reluctant, or unable, to confront the vested and parochial interests of local government generating authorities. Despite repeated recommendations for the centralised control of generation and high voltage transmission, Cahill's dilemma was the absence of an appropriate catalyst that could be utilised to counter the politically influential local government generating authorities, such as the SCC. Cahill’s response in 1945, the Electricity Authority of NSW, as with the Electricity Advisory Committee before it, was not given powers to construct, acquire or operate any generating facilities. These remained with the separate generating authorities.

The potential electoral repercussion of power restrictions in the lead-up to the 1950 state election eventually provided Cahill with an additional trigger to counter vested interests, and instigate sweeping reforms to centralise the operation and ownership of generation and transmission. Given greater political willpower on the part of the State Government it could have centralised the ownership and operation of the industry much earlier. New management approaches to the resolution of engineering and technical issues facing the industry could have been implemented earlier with the possibility of an earlier resolution of the power restrictions and blackouts.

The next chapter examines the changes to the structure of the NSW generating industry as it transitioned from an uncoordinated regional structure to a coordinated regional structure based on the existing interconnected system and centralised ownership and operation of the state’s generation and high voltage assets. The Electricity Commission’s activities to resolve the postwar power crisis, and three decades of expansion of its generating assets are examined against a background of a seemingly ever increasing demand and increasing levels of government involvement in its management.

Chapter 4 The Golden Years - Demand and Technology (1950 – 1980)

Introduction

For NSW residential electricity consumers, the years 1950 and 1957 were worlds apart. On 1 December 1950, the *Sydney Morning Herald* published a government notice advising that the "use of electricity is compulsorily restricted by regulation" and that only strict adherence to the regulations would minimise the effects of blackouts.[1] Seven years later in the 25 May 1957 edition, the *Sydney Morning Herald* published a special supplement extolling a robust, flourishing NSW electricity supply industry.[2] Regular and severe blackouts were a thing of the past and a reliable and secure power supply was becoming the norm. Sales of electricity had increased by over 350 per cent as industrial, commercial and residential consumption increased.[3] During those seven years, the number of residential connections increased dramatically, and many households acquired major electrical appliances for the first time.

The thirty-five years following the end of the Second World War (1945-1980) were years of economic growth, rising wages and low unemployment in Australia.[4] In the national and broader international context, some historians have referred to this period as

---

[1] "The Use of Electricity is Compulsorily Restricted by Legislation", *Sydney Morning Herald*, 1 December 1950.
[2] "NSW Electricity Comission Supplement", *Sydney Morning Herald*, 25 May 1957.
[3] *Annual Reports of the Electricity Commission of New South Wales / Pacific Power*.
[4] Joanne Loundes, "A Brief Overview of Unemployment in Australia," Melbourne Institue of Applied Economic and Social Research, http://www.melbourneinstitute.com/wp/wp1997n24.pdf. [Accessed 18 June 2009]. Figure 1: Unemployment this century (per cent). 3. David Meredith and Barrie Dyster, *Australia in the global economy: continuity and change* (New York: Cambridge University Press, 1999).Table 7.1 Real economic growth, selected countries, 1950-54 to 1975-79, 157.

the "golden age of controlled capitalism."[5] John Casazza has identified the twenty years, 1945-1965, as a golden age for the US electricity supply industry.[6] Larger capacity plants were installed at progressively lower £($) per MW construction costs; improved thermal efficiencies resulted in less fuel being used; power stations located at the fuel source became the norm and the extent of operational coordination increased.

Despite postwar electricity shortages, the period to 1980 was also golden years for the ECNSW. Accordingly, the main themes of this chapter focus on the structure of the generating and transmission industry after 1950, the demand for electricity that rose at rates often greater than the population increase, the impact power shortages had on consumers and the Commission, and the extent to which increases in economies of scale and technical improvements contributed to reductions in the Commission's production costs and ultimately the cost to consumers. Consequently, this chapter examines the Electricity Commission's efforts to meet increases in demand and provide a reliable supply.

Industry structure

While the industry took tentative steps to interconnect the fragmented networks in the early 1940s, effective overall control remained elusive and the industry remained fragmented and uncoordinated. This was despite the government establishing the Electricity Authority in 1945 to promote and regulate the industry. With the exception of the twelve months H.G. Conde was Emergency Electricity Coordinator from May 1949, overall coordinated operation of generation and transmission was minimal. From May 1950, the newly formed Electricity Commission initially exercised day-to-day oversight of the operations of the four major generating authorities, and assumed full formal operational control and legal ownership as each was formally transferred.

---

[5] Martin Chick, *Electricity and energy policy in Britain, France and the United States since 1945* (Cheltenham, England: Edward Elgar, 2007). 1. Manfred B. Steger and Ravi K Roy, *Neoliberalism* (Oxford: OUP, 2010). 7.

[6] Casazza, *The Development of Electric Power Transmission: the role played by technology, institutions, and people*: 27-28.

Figure 4.1 illustrates the evolution of the NSW electricity generation industry from a fragmented arrangement of a myriad of uncoordinated isolated generating plant and systems, through to a statewide coordinated regional system owned and operated by the Electricity Commission. The coordinated regional system structure, established in May 1950, remained until February 1995 when TransGrid, a new statutory authority, assumed control and ownership of the high voltage transmission network.[7] Figure 4.1 also illustrates the 1955 interconnection of the high voltage transmission networks of NSW and the Snowy Mountains Hydro-electric Authority and the 1959 extension to Victoria.

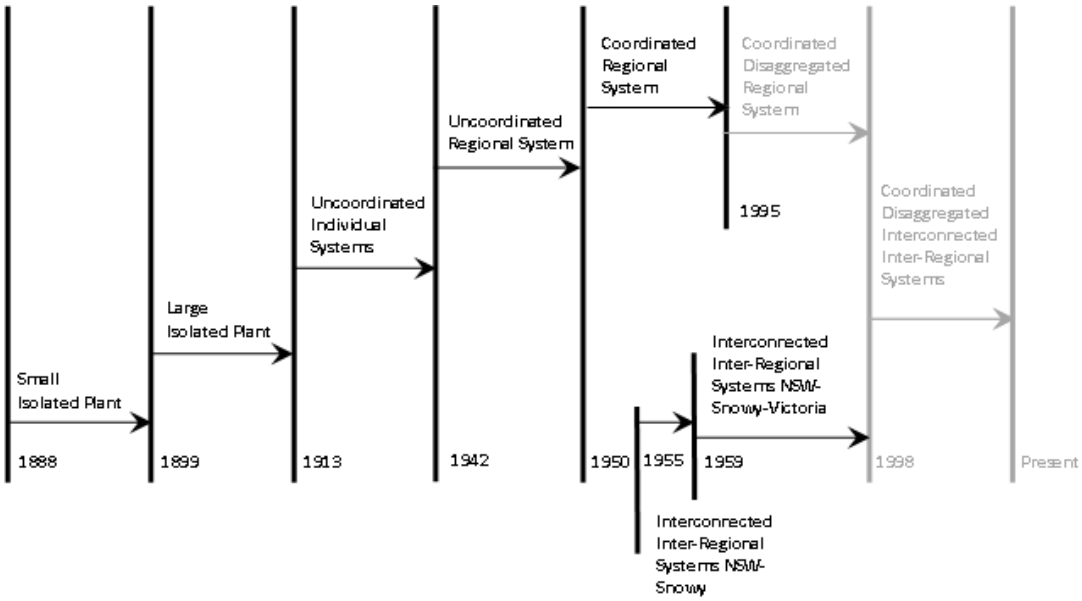

Figure 4.1 Basic model modified for the NSW context
Source: Adapted by author from John A Casazza, *The Development of Electric Power Transmission: The Role Played by Technology, Institutions, and People*, 7.

Coordination of the entire NSW system by one entity had several engineering advantages. These included the use of generating units with the lowest production costs, the shared use of reserve plant, coordination of plant shutdowns for maintenance and the

[7] TransGrid was established as part of the NSW Government's preparations for the implementation of a national electricity market.

reduction in the total amount of installed generating capacity to meet the overall demand.[8] As the ECNSW progressively commissioned increasingly larger generating units, and the interconnected system's capacity grew, the benefits of economies of scale denied to the smaller fragmented networks became a central feature of the coordinated regional system.

After 1950, as illustrated in Figure 4.2, the NSW coordinated regional system comprised two major components. Generation and HV transmission were owned and operated by the ECNSW, and in turn supplied bulk electricity to a number of distributors in addition to the NSWGR, the ACT and two Commonwealth Departments located in NSW.[9]

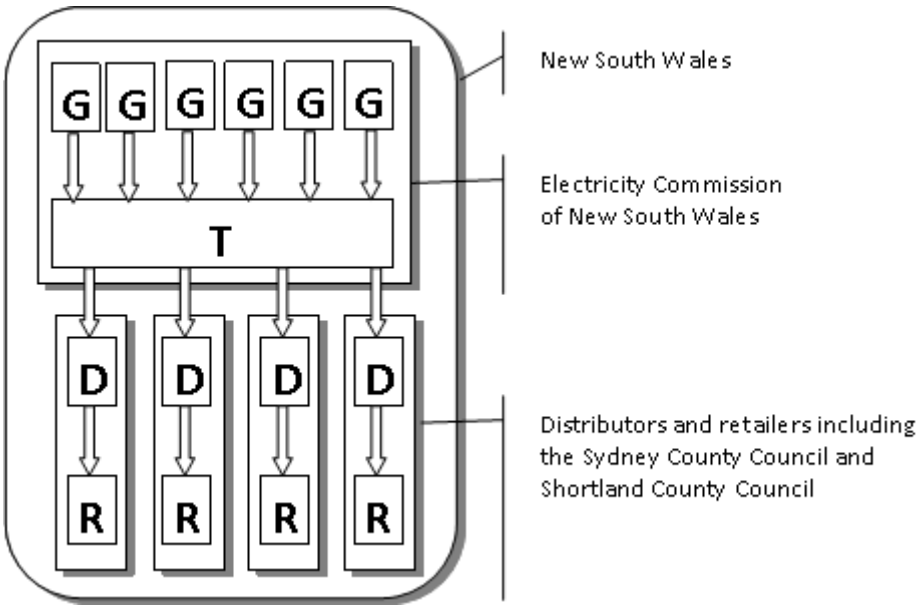

Figure 4.2 Basic configuration of the NSW coordinated regional system.

---

[8] *Report on the Interchange of Electricity Between The State Electricity Commission of Victoria and The Electricity Commission of New South Wales*: Production Co-ordination Branch, 1964, December 1964, 1-2.

[9] In June 1953 the ECNSW supplied bulk electricity to thirty-five Municipal and City Councils, twenty Shire Councils, twelve County Councils, three Franchise Holders, the NSW Water Conservation and Irrigation Commission, the NSW Department of Railways, and two Commonwealth Departments (Department of the Interior - Canberra, Jervis Bay, and the Department of Defence Production - St Marys).

450 MW capacity to meet 700 MW of demand

As noted in the previous chapter, the Electricity Commission's first Annual Report paints a dismal picture of the state of NSW's electricity supply industry in 1950. An effective generation capacity of 450 MW was available for meeting an estimated 1950-winter peak demand of 700 MW.[10] Until this critical issue was resolved, this period was far from being characterised as golden. For the consumer, the critical issue revolved around the reliability of supply and the randomness of electricity blackouts.[11]

One of the ECNSW's first acts to resolve the power crisis was to impose general, yet compulsory, restrictions on the use of electricity in December 1950. Industry was required to cut its maximum demand by thirty per cent based on 1948 usage.[12] Commercial consumers could not use external lighting before 9 pm and interior lighting was limited to 30 per cent during the day. During the morning peak demand period, residential consumers could only use clocks, refrigerators and radios. Radiators were banned from 7 am to 9 pm.

Even with these restrictions, the supply situation continued to deteriorate. Additional restrictions based on the state being divided into five Load Group Zones were introduced in late April 1951.[13] In each zone, industrial and commercial consumers were prohibited from using electricity from the interconnected system between 7 am and 9 pm on a specified day of each working week. The roster cycle was over five weeks, with each

---

[10] Effective generation capacity: refers to the actual output of an individual generator, the system as a whole, rather than the design (nameplate) output. The age of the plant, its state of repair are two factors that restricted generating units from achieving their nameplate output.

[11] Blackouts and power restrictions are two reasons consumers being deprived an electricty supply. For a more detailed discussion of these topics see Appendix 1.

[12] "The Use of Electricity is Compulsorily Restricted by Regulation", *Canberra Times*, 1 December 1950.

[13] *Annual Report of the Electricity Commission of New South Wales - for the period 22nd May, 1950, to 30th June, 1952,* 8-9.

zone having two restricted days every fifth week.[14] This arrangement continued for eighteen months, and minimised unplanned instances of load shedding to all classes of consumers. Over and above the zoning restrictions, the general restrictions remained in place until they were gradually relaxed between September and October 1952.

Once zoning had been introduced, many consumers acknowledged that being aware of their rostered zone day well in advance enabled them to be prepared. Nevertheless, in the early days of zoning, power supplies were so limited that blackouts often extended beyond that day's assigned zone. This was powerfully illustrated on 30 April 1951, the first day of zoning. That day the interconnected system had a deficiency of 120 MW.[15] Zoning restrictions in Zone A, the day's nominated zone, reduced its demand from 92 MW to 48 MW, leaving a total of 76 MW to be shed across the entire interconnected system. Despite not being nominated for mandatory restrictions for that day, other Zones, nonetheless, suffered multiple extended blackouts.

As a child, Sandra Jobson recalled many years later that the blackouts would usually hit her home in Roseville, Sydney, at dinner time. Her mother would curse, "that dratted Mr Conde!" as she looked for candles to light the dinner table.[16] Jobson acknowledges that, "Candlelight Conde", as he was unfairly characterised in the media, "was a much maligned man … who did more than anyone to solve the problem of the blackouts."[17]

---

[14] The State was divided into five geographical areas; County of Cumberland, County of Northumberland, South Western,Western and the North Coast. Each geographical area was then divided in five sub-areas. Each sub-area was allocated to a Zone A to E. The use of electricity was prohibited in a pre-specified Zone on a different day each week and two days in a fifth week. The Sydney CBD bounded by Darling Harbour to the west, Macquarie and College Streets to the east, Circular Quay and the Rocks to the North and Central Station to the south was divided into five areas and each allocated to one of the Zone Groups.

[15] State Records NSW: Premier's Department Special Bundles, Electricity Commission, NRS 12061, H. G. Conde: Electricity Commission of New South Wales, *Power Statement, 7 May 1951*. (9/4013.2, 9/4028.1).

[16] S. Jobson, "Power for the People: A History of Electricity in Sydney." (unpublished manuscript, 2004),

[17] ———, "Power for the People: A History of Electricity in Sydney."

The last restrictions on the use of electricity were lifted in October 1953, seven years after they had commenced and three-and-a-half years after the Electricity Commission had been formed.

Social factors drove the demand

During this period (1950-1980), forecast increases in production capacity were usually based on past demand trends. The ten per cent annual growth rates of the late 1950s and six per cent growth rates of the 1960s were anticipated to continue indefinitely. Whether the ECNSW's forward planning model took social factors into consideration is difficult to ascertain as available documentation, Annual Reports, for example, make limited reference to the drivers of average or peak demand. Nevertheless, a number of authors including George Wilkenfeld, Peter Spearritt, Deepak Sharma, Robert Bartels and G.D. McColl have suggested that the demand for electricity is a function of a number of societal factors.[18] Residential demand was at the forefront of these factors. In the twenty-five years to 1980, the population of NSW increased nearly fifty per cent, which in turn translated into an increase in the number of new houses constructed. Over the period the number of residential connections doubled, and of greater significance, the consumption of electricity per household increased by nearly 350 per cent.[19] (see Figure 4.3)

---

[18] Wilkenfeld and Spearritt, *Electrifying Sydney - 100 years of Energy Australia*: Preliminary Section, 6. Wilkenfeld, "The Electrification of the Sydney Energy System, 1881-1986," 240.
[19] Energy Authority of New South Wales., *Electricity in New South Wales: New South Wales Energy Statistics* (Sydney: Energy Authority of N.S.W., 1982). 16. "Australian Historical Population Statistics", [Accessed 1 December 2008].

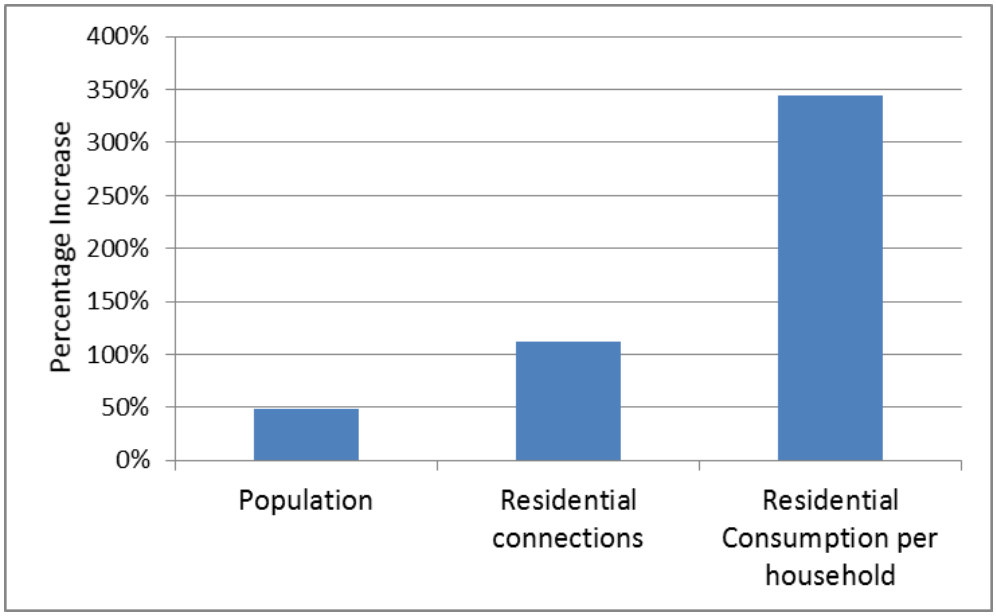

Figure 4.3 Percentage increases in population, residential connections, and residential electricity consumption – NSW 1954-55 to 1979-1980.
Source**:** Energy Authority of NSW "Electricity in New South Wales": New South Wales Energy Statistics (Sydney: Energy Authority of NSW., 1982) 16. "Australian Historical Population Statistics." Australian Bureau of Statistics, www.abs.gov.au/ausstats/abs@.nsf/mf/3105.0.65.001. (Accessed 1 December 2008)

Significant in the increased residential consumption are the changes in the end-use of electricity. Wilkenfeld and Spearritt refer to the postwar period to 1980 as years of the "consumer revolution."[20] In 1950, for example, less than two per cent of Australian households owned an electric washing machine.[21] By 1962, this had increased to seventy-one per cent and ninety per cent by 1980. In 1950, the majority of households in Sydney and NSW used gas as the primary energy source for cooking, only twenty per cent used electricity.[22] By the mid-1960s, electricity used for cooking had surpassed gas, and by 1980, accounted for approximately seventy-two per cent.

---

[20] Wilkenfeld and Spearritt, *Electrifying Sydney - 100 years of Energy Australia*: 62.
[21] Wilkenfeld, "The Electrification of the Sydney Energy System, 1881-1986," 240.
[22] ———, "The Electrification of the Sydney Energy System, 1881-1986." Figure 6.10 Penetration Rates, Substitutable Appliances Sydney and NSW 1947-1985, 253.

If the level of residential affluence was to be measured by the penetration rates of consumer appliances, the thirty years to the early 1980s were indeed prosperous. Sales of washing machines, vacuum cleaners and dishwashers increased substantially. This prosperity, at least as a function of the use of electricity, is perhaps best illustrated by the penetration rate of domestic refrigerators. In 1946, only fifteen per cent of households in the SCC distribution area had one. By 1953, this had risen to seventy per cent and in 1983 there were an estimated five refrigerators in every four households.[23] Twenty per cent of household had air-conditioning in the early 1980s, twenty-five per cent by the mid-1990s and over forty per cent by the early 2000s.[24] Wilkenfeld and Spearritt attribute this increase to promotion of the benefits of air-conditioning by the SCC coupled with a reduction in the cost of air conditioners, and poor design and orientation of domestic residences.[25]

Equally prominent in the increased use of electricity was the increased number of industrial and commercial consumers and their consumption. In the twenty years to 1973 for example, the number of industrial consumers increased by eighty-six per cent, industrial consumption by 550 per cent, and similarly to residential consumption, the average consumption per industrial consumer increased 250 per cent.[26] This suggests that electricity had become the preferred energy source for industry and that many industrial consumers were very heavy users. McColl also suggests that some industries experienced an increase in the quantity of electricity required to produce each unit of industrial output.

Mindful of these increases, a broad review of consumption trends indicates two broad phases in the end-use of electricity. The first period up to the mid-1970s relates to the filling of the postwar pent-up demand and increased penetration rates to existing and new residential and industrial connections. The second phase was evident from the mid to late

---

[23] ———, "The Electrification of the Sydney Energy System, 1881-1986," 240.
[24] Wilkenfeld and Spearritt, *Electrifying Sydney - 100 years of Energy Australia*: 68.
[25] ———, *Electrifying Sydney - 100 years of Energy Australia*: 68.
[26] McColl, *The Economics of Electricity Supply in Australia*: 12.

1970s and pronounced from 1980 onward. Most existing connected households had acquired the major electrical appliances and further increases in demand generally became a function of the rate of new customer connections. Nevertheless, the introduction of new consumer technologies contributed to an increase in demand initially through sales to existing residential consumers and later to new connections. Wilkenfeld suggests that by the late 1970s, most of the factors that affected the initial rapid growth rate and the long period of moderate increases had been all but exhausted.[27]

Electricity production a function of demand

Historical trends, operational experience, or other forecasting procedures, can guide decisions about long-term new generation or transmission line capacity. However, a number of aspects underpinned this relationship between demand and the decisions made by the ECNSW. An unstated, yet implicit assumption is that electricity will be available to any consumer connected to the grid, at any time and in the quantity required. In many respects, this assumption forms a social contract between the utility and the consumer, not only in the long-term as per historical trends, but also on a day-to-day and minute-to-minute basis.[28] It is this assumption that drives the corporate commitment to provide a reliable supply of electricity. The quandary, however, for the ECNSW and other generating utilities in meeting this goal, is that consumer demand is an independent variable.[29] Consumers, not the utility, have final control of the demand for electricity. In the short-term, the actual demand each day; each minute; each second, is also subject to the vagaries of weather, special events, bushfires, equipment failure, changing consumer usage, price and a myriad of other factors.

In the longer term however, the ECNSW/Pacific Power and its predecessors, implemented Demand Side Management (DSM) strategies to encourage customers to actively manage their end-use of electricity to achieve benefits for the organisation, and

---

[27] Wilkenfeld, "The Electrification of the Sydney Energy System, 1881-1986," 261 - 62.
[28] von Meier, *Electric Power Systems: a conceptual introduction*: 136-37.
[29] ———, *Electric Power Systems: a conceptual introduction*: 136.

ultimately the consumers and the community.[30] Early generating authorities such as the SMC in the early 1900s, and the SCC in the 1960s, engaged in, what would now be termed DSM activities. These encouraged consumers to hire electric motors, or in the latter's case by promoting the use of electricity through its 'Live Better Electrically' public relations campaign.[31] By the 1990s, Pacific Power's DSM strategies encouraged consumers to use less not more electricity. The objective of these strategies included improving the utilisation of existing assets through load shifting throughout the daily load profile, peak clipping and an overall reduction in demand.[32] Activities to achieve these aims included the use of time-of-use bulk supply tariffs, interruptibility contracts with major direct industrial customers such as aluminium smelters, off-peak water heating by distribution authorities and the deferral of supply side transmission projects.

Even with these DSM strategies in place, demand is a variable that the utility takes steps to predict, and meet, yet does not control. The interplay between the demand for electricity and its supply is further compounded by the fundamental physics of the process. Unlike other traded commodities; coal, wheat, or automobiles, for example, AC electricity cannot be easily or economically stockpiled between its production and when it is consumed: it must be consumed as it is produced.

To meet its corporate goal of providing a reliable supply to meet an independently variable demand, the ECNSW and other utilities have to operate in multiple time frames. Long-term they have to commit to the design and construction of production and transmission assets many years, often a decade or more in advance. However, as will be discussed in Chapter Six, this long construction lead time can prove a disadvantage when

---

[30] *Electricity Development and Fuel Sourcing Plan,* 20-24.

[31] These early activities were aimed at improving the utilisation of expensive generating plant and equipment. In technical terms the aim was to improve plant 'load factor', or the very similar 'capacity factor' - the term used by the ECNSW/Pacific Power. 'Load Factor' is the ratio of average usage over a set time period to the plant's full load rating over the set time period. 'Capacity Factor" employs actual usage rather than average usage.

[32] *Electricity Development and Fuel Sourcing Plan,* 20-24.

juxtaposed with changes in the economic environment, government policy or electricity dependent industries with a much shorter construction lead time.[33] In the short-term however, the utility has to ensure that sufficient generation capacity is in-service to meet the instantaneous independently variable demand. In addition, in a fully interconnected system, generating utilities have to provide in-service generating capacity as contingency insurance, and system operational requirements such as frequency and reactive power control.

To cater for the day-to-day, and long-term forecast demand, the ECNSW's development of its production assets during the three decades to 1980 occurred in a number of distinct phases. First was the acquisition of existing assets, followed by activities taken between May 1950 and May 1953 to resolve the electricity crisis, and third the ECNSW's construction and commissioning of major power stations of its own design during the 1960s and 1970s. The commissioning of two 660 MW generating units at Vales Point B in 1978 and 1979, while chronologically in this period, for technical reasons are considered with the additional ten generating units of this size commissioned between 1982 and 1993.

In the early 1950s, the ECNSW was the beneficiary of the often criticised forward planning of its generating predecessors. As has been noted, the construction and commissioning of new plant as well as the maintenance of existing plant had been hindered during World War Two. At face value, it could be argued that the previous fragmented organisations had plans and orders in place that would have resolved the power crisis. However, none of these organisations viewed the statewide provision of

---

[33] In this situation, the financial risk associated with future development is with the owner of the asset, which is the taxpayer. In the New South Wales privatised generation industry of the early twenty-first century, the financial risk of future development lies with the private sector. Western Australia, which is not connected to the south-east Australia national grid, and thus isolated and relatively small, utilises a capacity market arrangement in order to ensure future generation capacity will be available when required. In this scenario, the taxpayer assumes a portion of the financial risk.

electricity as their responsibility. The SCC, for instance, was firmly committed to a geographically small area of the state, while the Department of Railways viewed electricity production and transmission for public consumption as arguably not their first priority.

In May 1950, the ECNSW assumed oversight, if not on-site operational control, of the generating and bulk transmission assets of the four major NSW generating authorities. Legal ownership and full operational control of these assets was achieved progressively between November 1950 and July 1957 as each was transferred to the ECNSW. The generating and transmission assets of the Department of Public Works' were formally transferred in November 1950.[34] The 28.5 MW five-unit steam station at Port Kembla and the 20 MW four unit hydro station at Burrinjuck were the major acquisitions.[35] Also transferred were smaller stations at Wyangala Hydro, and the steam stations at Cowra, Canberra and Yanco. In addition, the partly constructed 120 MW station at Tallawara and a soon-to-be-commissioned 15 MW extension to Port Kembla were also transferred.

The assets of the SCC were transferred in January 1952 and were the major acquisitions in the early years of the ECNSW. The 377.5 MW of generating capacity transferred from the SCC constituted approximately fifty per cent of the Commission's initial production portfolio.[36] The 48 MW at Pyrmont A, while important to a struggling supply system, was dwarfed by the 328 MW output of Bunnerong A and B Power Stations. Commissioned between 1929 and 1937, the nine units of Bunnerong A had an

---

[34] *Annual Report of the Electricity Commission of New South Wales - for the period 22nd May, 1950, to 30th June, 1952,* 18-19.

[35] *Annual Report of the Electricity Commission of New South Wales - for the period 22nd May, 1950, to 30th June, 1952,* 24. *Appendix 1. Generating Plant Installed in Power Stations on the New South Wales Interconnected System at May 1950.*

[36] *Annual Report of the Electricity Commission of New South Wales - for the period 22nd May, 1950, to 30th June, 1952,* 24. *Appendix 1. Generating Plant Installed in Power Stations on the New South Wales Interconnected System at May 1950.*

installed capacity of 178 MW and an average age of nearly twenty years.[37] Of greater significance, the three 50 MW units of Bunnerong B were the largest on the interconnected system at that time and, importantly, had an average age of only seven years. At the time of acquisition, the SCC was constructing or had on order five 50 MW generators - four for Pyrmont B and one for Bunnerong B power stations. Of these, two were commissioned at Pyrmont B in 1952 and 1953 respectively and contributed to the resolution of the immediate power shortages.

The 335 MW of generating assets of the Department of Railways were formally transferred in January 1953. As with the SCC and the Department of Public Works (PWD), the age of the Department's generating facilities was a factor that influenced the ECNSW's ability to resolve the power crisis it inherited. Even with the 50 MW White Bay unit commissioned in 1950, the average age of the NSWGR's generators was over twenty-one years. The Railway's power station construction program, while perhaps not contributing to the immediate resolution of the postwar power crisis, nevertheless formed the backbone of the ECNSW's intermediate response to the growing demand for power. To supply power for the proposed electrification of the Sydney to Newcastle railway line, and to contribute its supply to distributors, the NSWGR had commenced the design of Lake Macquarie Power Station (renamed Wangi Power Station) in 1937.[38] The six 50 MW units at Lake Macquarie were finally approved in 1947 with civil works

---

[37] While the MW output of a generating unit is important, especially in times of shortages, the age and reliability of each unit are also critical. Electricity authorities expect recently installed equipment to operate reliably at its specified output rating for extended periods. While regular plant maintenance can be planned, unplanned breakdowns restrict output or require the entire generating unit out of service. The older a generating unit is the more prone it is to these unforced outages. However, output at the newer Bunnerong B in its early years, despite producing a significant percentage of the Interconnected System's requirements, output was restricted by boiler limitations. This was reflected in Bunnerong B having a Capacity Factor below the average of the other stations on the Interconnected System. As plant ages its thermal efficiency generally deteriorates. Vales Point A for example operated with a Thermal Efficiency of 32.1 per cent in 1963 its first year of operation. By 1989, this had declined to 29.9 per cent.

[38] Fetscher, *The Power Stations of the Sydney County Council*: 129.

commencing in 1948.[39] The first three 50 MW units were commissioned between 1956 and 1958. In January 1952, however, the ECNSW, influenced by ex-SCC engineers, cancelled the orders for the final three 50 MW units, redesigned the second half of the station, and ordered three 60 MW units.[40]

The formal acquisitions of the generating and transmission assets of the four major generating authorities were completed in 1957 with the formal transfer of Balmain Power Station (124 MW) from the ELPSC.[41] Unlike the SCC, the Department of Railways and the PWD, which were state or local government authorities, the ELPSC was a private company. The protracted transfer process was a consequence of the drawn out legal negotiations over the extent of the financial compensation to be awarded to the ELPSC.

Figures 4.4 to 4.10 illustrate the major operating power stations the Electricity Commission gained control of on its formation.[42]

---

[39] ———, *The Power Stations of the N.S.W.G.R.*: 107-08.
[40] ———, *The Power Stations of the N.S.W.G.R.*: 107-09.
[41] *Annual Report for the Year ended 30th June 1957*: 1958, 12-13, 39-40.
[42] The date in each image caption indicates the year the image was produced, not the date of acquisition or the commissioning of the asset.

Figure 4.4 Bunnerong (B station in the foreground) – March 1953 (ECNSW 00118)

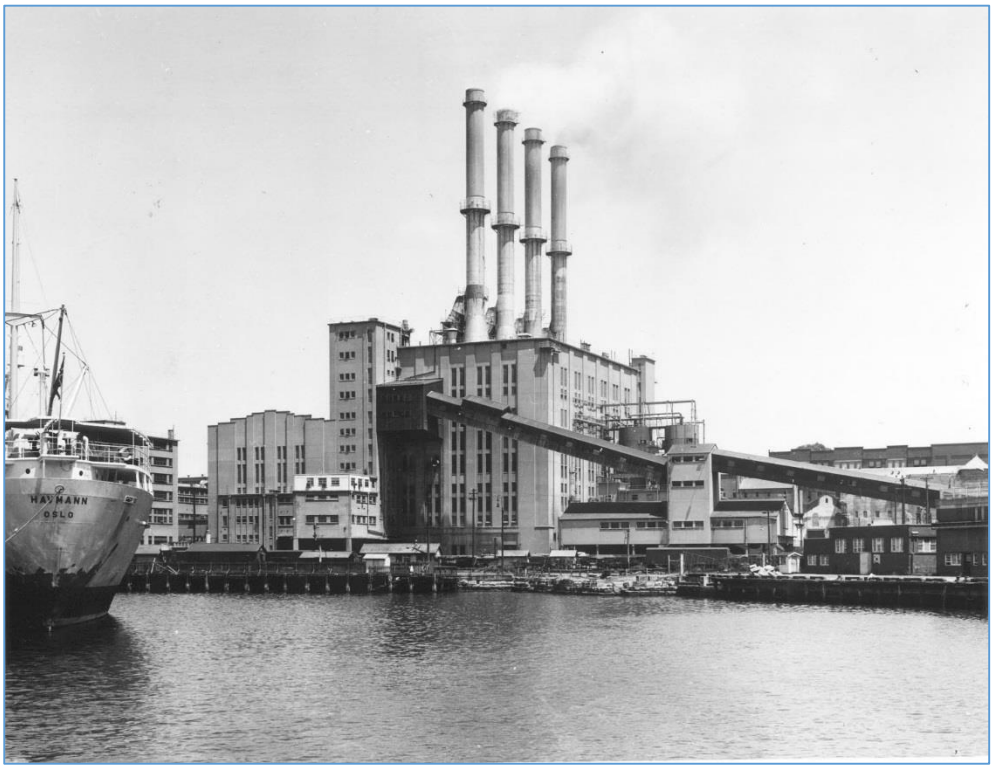

Figure 4.5 Pyrmont – February 1964 (ECNSW 04759)

Figure 4.6 White Bay – February 1958 (ECNSW 01509)

Figure 4.7 Balmain – Date unknown (ECNSW CN1.0000)

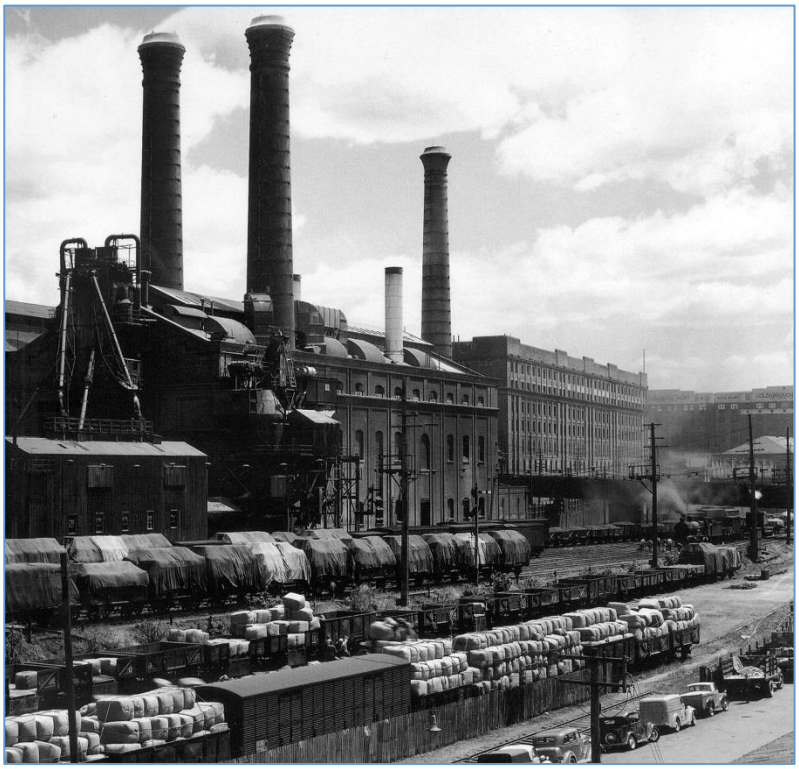

Figure 4.8 Ultimo – Date unknown (ECNSW 02672)

Figure 4.9 Zaara Street, Newcastle – January 1956 (ECNSW 00906)

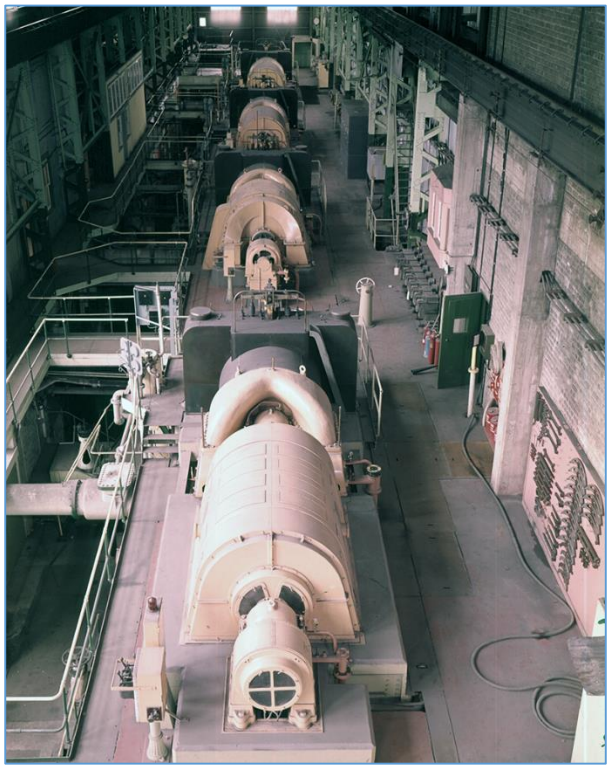

Figure 4.10 Lithgow – January 1964 (ECNSW CT10.0001)

The commissioning of over 200 MW of new generating plant between May 1950 and mid-1953 was fundamental to the resolution of the postwar power crisis.[43] In addition to generating units being commissioned at White Bay, Pyrmont and Balmain, a number of small coal-fired and diesel powered stations were quickly constructed at various locations on the interconnected system. The first ten of sixteen five MW units were commissioned as 'Package' Power Stations at Penrith, Port Kembla, Liverpool (Figure 4.11) and Maitland. The decision to purchase these 'off-the-shelf' units centred on a number of key factors. These included their standardised design; their fast rate of construction; major components being sourced from only one supplier, and their construction imposing limited demand on Australian material, technical and labour resources. The urgency of the supply situation dictated a break with the tradition of purchasing from British

[43] *Annual Report for the Year ended 30th June 1953*, 20-21. *Appendix 4 Generating Plant Installed at 30 June 1953.*

suppliers. These generating units, which were funded by the Commonwealth Government, were sourced from US suppliers.

Figure 4.11 Liverpool 'Package Power Station'– October 1956 (ECNSW 00939)

In addition to the 'Package' power stations, a total of 25 MW of internal combustion generation were commissioned at geographically diverse locations across the state.[44] These installations added to the overall quantity of power available and enabled the deferment of extensions or upgrades to the interconnected system into these areas. Finally, two electrically propelled salvage vessels (Figure 4.12) were leased from the Australian Shipping Board between November 1950 and late 1952.[45] These vessels were connected to the interconnected system at Balmain Power Station and contributed a total

---

[44] *Annual Report of the Electricity Commission of New South Wales - for the period 22nd May, 1950, to 30th June, 1952,* 13. *Internal Combustion units commissioned at Brookvale, Canberra, Kempsey, Parkes and the State Dockyard and Civic Railway Workshops in Newcastle.*

[45] Electricity Commission of New South Wales, *Minutes of Board Meeting,* 2 August 1950, Item 60.

of 4.8 MW. An Electricity Commission engineer employed during this period commented years later that with such a small output, these vessels had greater public relations value than their contribution to meeting the demand.[46]

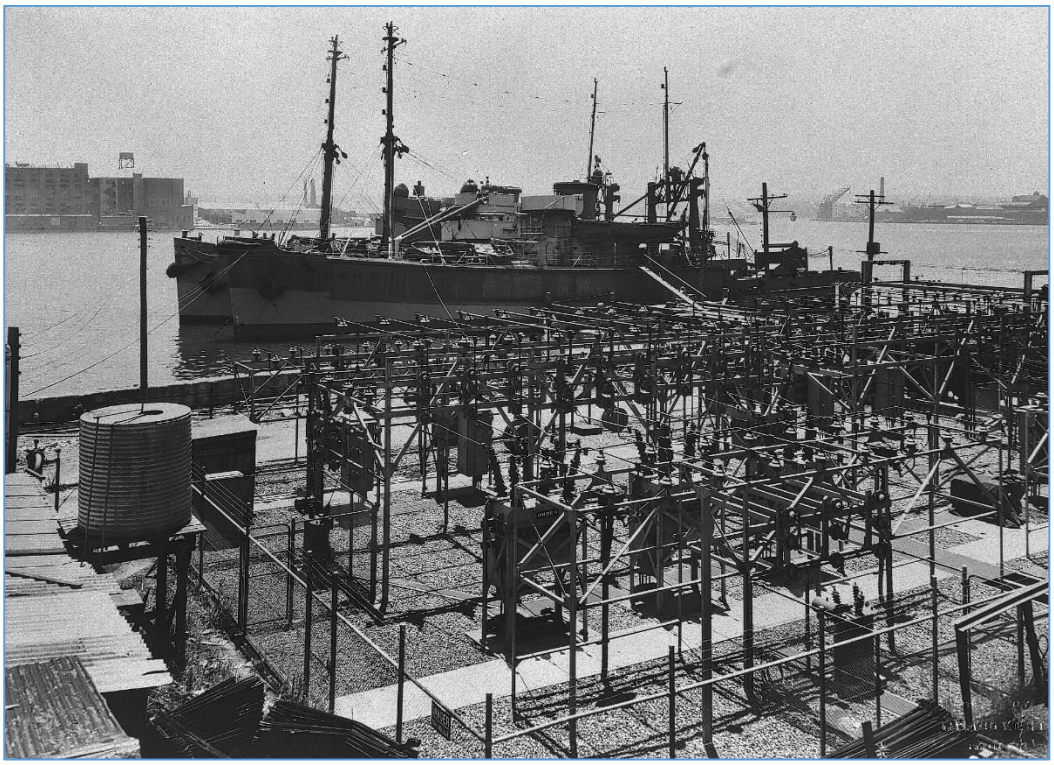

Figure 4.12 Emergency supply vessels at Balmain – February 1952 (ECNSW 00112)

With the lifting of power restrictions in late 1953, senior management was acutely aware that only the task of "beating" the blackouts" had been accomplished.[47] H.G. Conde noted that:

> the immediate achievement of bridging the gap between demand and supply although of major importance does not mean that the Commission

---

[46] Interviewee L, Personal Communication, Interview or Questionnaire with author, 14 June 2011, 16 August 2012.

[47] "Ten Years of Power Progress", *Network*, Electricity Commission of New South Wales, May 1960.

> can rest, for it is still faced with the gigantic problem of keeping ahead of the demand for electricity which is increasing at the rate of 10 per cent per annum.[48]

The Electricity Commission's focus became the twin issues of catering for a projected increase in consumption and ensuring that adequate, effective reserves of power existed to insure against day-to-day contingencies. These imperatives were compounded by the obvious need to replace ageing and inefficient plant.

The most significant and far-reaching technical decision taken in the Commission's early years was to commit to the development of new power stations at or adjacent to their fuel source.[49] In part, this implied that the economic advantages once associated with transporting coal into the Sydney metropolitan area had been reversed as HV transmission technologies improved. It was also an acknowledgment that the load centric positioning of power stations practised by the ECNSW's predecessors was no longer economically viable. The Department of Railways and the PWD had pre-empted this strategy by commencing the design of Lake Macquarie (Wangi) and Tallawarra Power Stations to be at sites adjacent to coalfields. In contrast the SCC, in gaining approval for a new 100-120 MW station at Lugarno on the Georges River chose to remain within the Sydney metropolitan area.[50] Lugarno was one of the first casualties of centralised control and a future of power generation based on the coalfields. Tenders received for Lugarno formed the basis for a station at Wallerawang in the central tablelands of NSW.[51]

Throughout the 1950s, the Electricity Commission, mindful of the importance of the need to construct new generating capacity adjacent to coal mines, engaged the Joint Coal Board to survey and investigate possible sites for future power stations throughout the

---

[48] "10 p.c. More Power A Year", *Sydney Morning Herald*, 27 May 1955.
[49] Sykes, "Development of the Electrical Supply System and the Future of Nuclear Power in New South Wales," 137.
[50] Fetscher, *The Power Stations of the Sydney County Council*: 83.
[51] Brady, "Electricity Supply in N.S.W. - the First Century and Beyond," 16.

state.[52] Of these, the most promising sites were located on the northern coalfields either on the Central Coast, Lake Macquarie or between Muswellbrook and Maitland.[53] In 1960, Vice-Chairman Fred Sykes envisaged four future 1,000 MW power stations each comprising between four and six generating units. The first, Vales Point on southern Lake Macquarie had been announced in December 1957.[54] The second, tentatively called Lakeside, envisaged in the approximate location of the present Munmorah station, was approved in February 1961.[55] The third, Hunter Valley #1, in the mid to upper Hunter Valley, was in the general area of the future Liddell Power Station.[56] The fourth, Hunter Valley #2, was predicted to be in the general area of Kurri Kurri and was the only location that Sykes did not accurately foresee. It was eventually commissioned as a 1,320 MW extension to Vales Point in 1978 -1979. It is of note that Conde and Sykes, in the 1950s, set the course of major power station construction in the Hunter area up to the mid-1980s. The commissioning of Eraring (2,640MW) between 1982 and 1984, and Bayswater (2,640MW) in 1985 – 1986, while not foreseen by Conde and Sykes, nevertheless illustrates their foresight in identifying the northern coalfields as the location for additional major power stations.

---

[52] Sykes, "Development of the Electrical Supply System and the Future of Nuclear Power in New South Wales," 138.

[53] The basic configuration of the Commission's plans for future development had been confirmed as the most appropriate by the US consulting firm Ebasco Services in the mid 1950s.

[54] Sykes, "Development of the Electrical Supply System and the Future of Nuclear Power in New South Wales," Fig. 5 "Future Main Transmission Network and Power Stations with Present System Load Quadrupled", 141. Fetscher, *The Power Makers: the History of the Central Coast and Hunter Valley Power Generating Stations*: 123.

[55] ———, *The Power Makers: the History of the Central Coast and Hunter Valley Power Generating Stations*: 131.

[56] An ECNSW drawing (02549 - Power Station Sites - Existing and Potential - Northern Coalfields) from this period, but not included in Sykes' paper, indicates that an additional site at Ravensworth, south-east of the Liddell site, was also under investigation for a major power station.

Vales Point A (1963) is significant in the history of the ECNSW for a number of reasons.[57] It was the first station completely designed, constructed and commissioned by the organisation. Second, unlike Wangi, Tallawarra and Wallerawang, Vales Point A (Figure 4.13) and its coal mines were developed as a single entity with coal being delivered direct to the station's coal bunkers by a series of conveyors.[58] Third, Vales Point A established the design philosophy that the Commission was to follow at Munmorah (1967-1969) (Figure 4.14), Liddell (1971-1974) (Figure 4.15), Wallerawang (1957-1980) (Figure 4.16) and later power stations. The *Sydney Morning Herald* labelled Vales Point "a new phase in economic power production."[59] Of the technical innovations incorporated in Vales Point A, those in boiler design arguably had the greatest impact. Improvements in alloy-steels and high-pressure welding techniques incorporated at previous stations were enhanced at Vales Point A and later stations. These enabled higher boiler pressures, temperatures and steam flows that were required for the higher unit electrical outputs. Vales Point A incorporated the first use in Australia of steam reheating. In this process, steam that has expanded through the high-pressure section of a steam turbine is returned to the boiler to acquire more energy and then expands through the turbine's intermediate and low pressure stages.

---

[57] Vales Point Power Station acquired the designation 'A' on the construction of the two 660 MW units in 'B' station in the late 1970s.
[58] G. J. McDonell: 1, *Report One: Annexures Planning, Economy, Flexibility Options Through the Mid 1980s.*, 1986, A65.
[59] "£55 Million Power Station", *Sydney Morning Herald*, 9 January 1963.

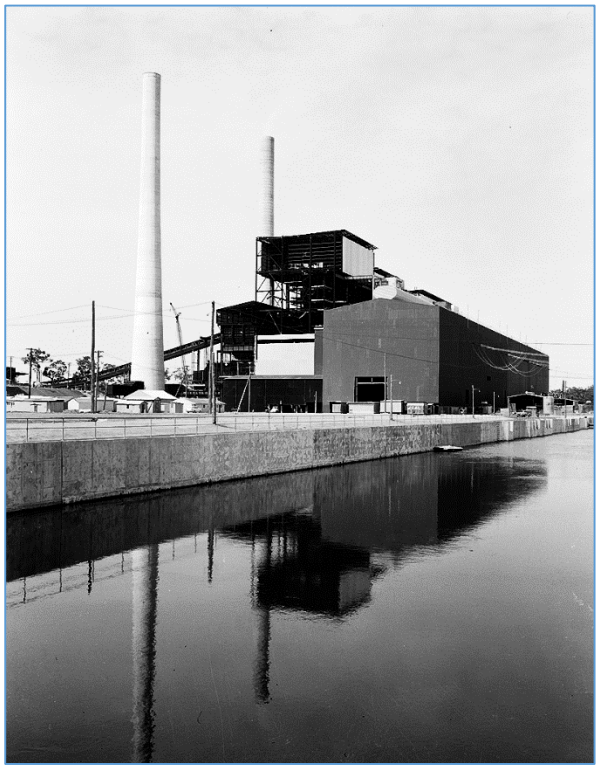

Figure 4.13 Vales Point A – January 1964 (ECNSW 04731)

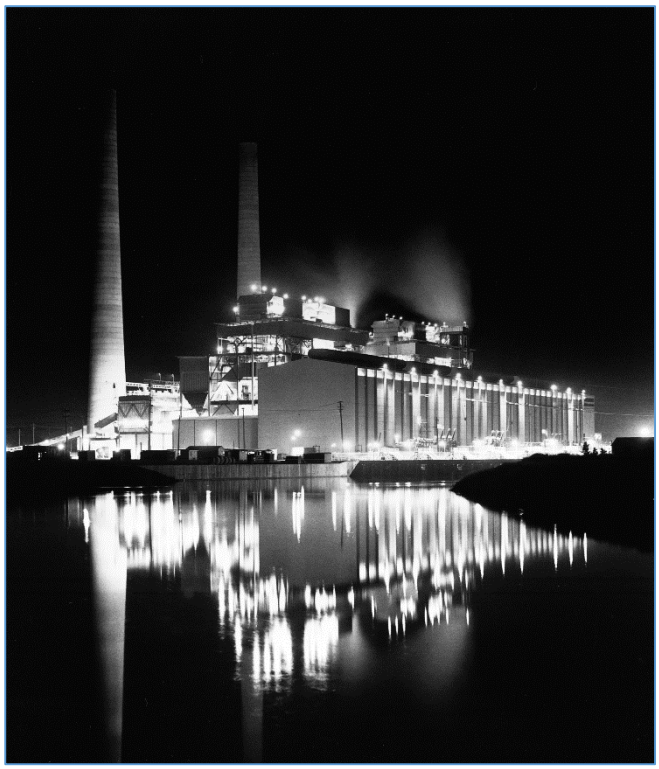

Figure 4.14 Munmorah – August 1985 (ECNSW 13900)

Figure 4.15 Liddell – June 1971 (ECNSW CT9.0045)

Figure 4.16 Wallerawang - October 1962 - (ECNSW 04026)

As demand and the capacity of the network increased, the Commission was technically able to install larger new generating plant, if not with each new power station, then at a steady progression. (see Figure 4.17)

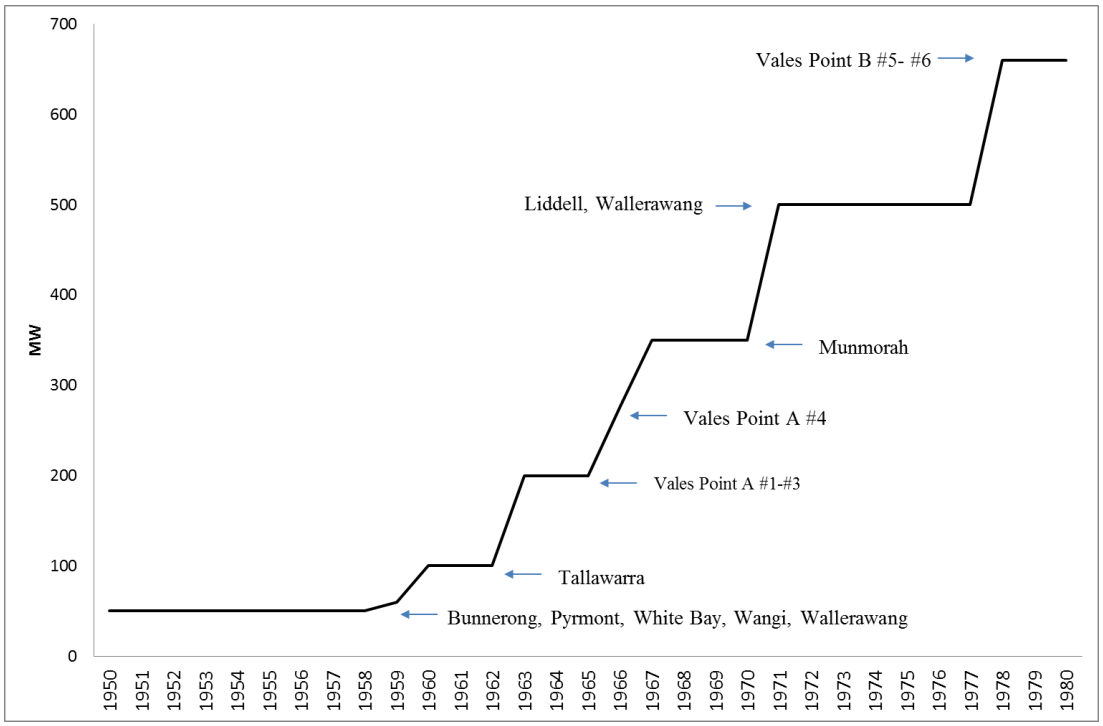

Figure 4.17 Largest generating unit on the network 1952 - 1980
Source: Data adapted from ECNSW, "Annual Reports," 1953 to 2000.

As the move from metropolitan based generation to the fuel-based had been crucial in the Electricity Commission of New South Wales (ECSNW)'s early years, the decision in the mid-1960s to purchase major plant and equipment from non-British suppliers was equally significant. Prior to Liddell, ECNSW generating plant and equipment had been purchased from British manufacturers such as English Electric (EE), Associated Electrical Industries (AEI) and C. A. Parsons. A technical preference for British technology was reinforced by the dictates of the tariff arrangements of the Imperial Preference trade policies and the foreign exchange controls associated with the Sterling

Currency Bloc.[60] By 1966, when the prospective tenders for Liddell were being considered, the importance to Australia of trade and currency policies associated with Imperial Preference were waning.[61] This trend was in part a response to the United Kingdom's determination to join the European Economic Community and Australia's trade focus shifting from Europe to Asia.[62] In addition to British suppliers tendering for Liddell, US company General Electric (GE) submitted a tender for four 600 MW turbo-generators. As the original specification was for four 500 MW units, GE's tender was ruled nonconforming. Importantly, two tenders for a 600 MW and a 500 MW Combustion Engineering designed boilers accompanied the GE tender. As with generator tender, the 600 MW boiler tender was ruled nonconforming. However, the 500 MW boiler offer was deemed conforming, and later accepted. Apart from the purchase of a series of small generating plant from US suppliers in the early 1950s, this was the first time major plant and equipment was sourced from non-British suppliers.[63] Frank Brady, a senior engineer at the time, notes that the ECNSW "somewhat regretfully" chose not to pursue the 600 MW option, for a number of reasons other than it being nonconforming.[64] Chief among these was GE's technical problems in converting their standard 60 HZ generator design to 50 HZ. The successful tender for the four 500 MW Liddell turbo-generators was British manufacturer EE.

The decision to purchase the 660 MW turbines for Vales Point B was the next time the British connection was broken. When the tenders for Vales Point B were received, the

---

[60] Ann Capling, *Australia and the global trade system: from Havana to Seattle* (Cambridge: Cambridge University Press, 2001). 17.
[61] David E. Nye, "History of Electricity Use," in *Encyclopedia of Energy*, ed. Cutler J. Cleveland (New York: Elsevier, 2004), 175.
[62] Robert U. Ayres, Leslie W. Ayres, and Vladimir Pokrovsky, "On the efficiency of US electricity usage since 1900," *Energy* 30, no. 7 (2005): 122.
[63] As discussed in the previous chapter, four, small, off-the-shelf, 20 MW package power stations had been purchased from the US to assist with the resolution of the 1946-1953 electricity crisis. These purchases had been financed by the Commonwealth Government.
[64] Brady interviewed by Hamilton, October - November 1996.

instinctive reaction was to ask which "was the best of the British offers."[65] Brady recalls that he asked why the ECNSW should restrict itself to British manufacturers' and not seriously consider a tender from the Japanese company Toshiba. The ECNSW's history of technical problems with turbines of British origin prompted this consideration.[66] Notably, the successful Toshiba tender was for a design under licence from GE in the US. The Japanese had resolved GE's 60/50 HZ conversion problems that had been an issue in the selection of generators for Liddell. The decision to award Toshiba the turbo-generator contract was made in an economic climate of improving economic relations between Australia and Japan in the lead-up and following the signing of the 1976 Basic Treaty of Friendship and Cooperation.[67]

Technical improvements and innovations included in each new station frequently resulted in improvements in operating efficiencies. As fuel is generally the greatest cost in the production of electricity, the unit or station with the highest thermal efficiency combined with the lowest fuel cost generally had the lowest production costs.[68] The maximum and average thermal efficiencies of all coal-fired power stations from 1952 to 1994 is shown in Figure 4.18. It illustrates the dramatic improvement through the 1950s and into the mid-1960s when Vales Point A was commissioned. A slowing in the rate of increase is evident with the commissioning of Munmorah (1967) and Liddell (1971) with further improvements taking place at Vales Point B (1979), and at Eraring (1982-1984). This slowing trend in improvements in maximum thermal efficiency implies that many of

---

[65] ——— interviewed by Hamilton, October - November 1996.

[66] These decisions to consider and eventually chose the Toshiba offer for Vales Point B were a number of years prior to the failure of the English Electric generators at Liddell in the early 1980s.

[67] Moreen Dee, *Friendship and co-operation: the 1976 Basic Treaty between Australia and Japan* (Canberra: Dept. of Foreign Affairs and Trade, 2006). 44-45.

[68] Thermal Efficiency is the ratio of the electrical energy produced in a period (MWh) and the heat value of the fuel consumed (petaloules). A generating unit or combination of units with a high thermal efficiency will use less fuel than one with a lower thermal efficiency for the equivalent quantity of power produced.

the benefits gained from new, higher output equipment, that is, the benefits of economies of scale were diminishing. Even so, over the same period the average thermal efficiency of the ECNSW's power station increased steadily. This is in contrast to the technological stagnation associated with thermal efficiency and economies of scale barriers that plagued the ongoing development of the US electricity generation industry from the mid-1970s. [69] Further improvements, at least in the Australian context, would be realised in the late 1990s and early 2000s as interstate authorities, and private providers introduced new technologies such as large super-critical, and ultra-critical thermal boilers and combined cycle gas turbine generation plant.

[69] Hirsh, *Technology and transformation in the American electric utility industry*: 2. In the US, the commissioning of each new power station, while of larger output, essentially utilised the same basic design philosophy with its inherent limits on thermal efficiency. Benefits from increasing economies of scale were limited by the available technology, particulary metalurgical. In NSW the size new generators was limited by the size of the network. Also, after the installation of the 660 MW units at Mt Piper, overcapacity issues precluded the commissioning of new large base load capacity.

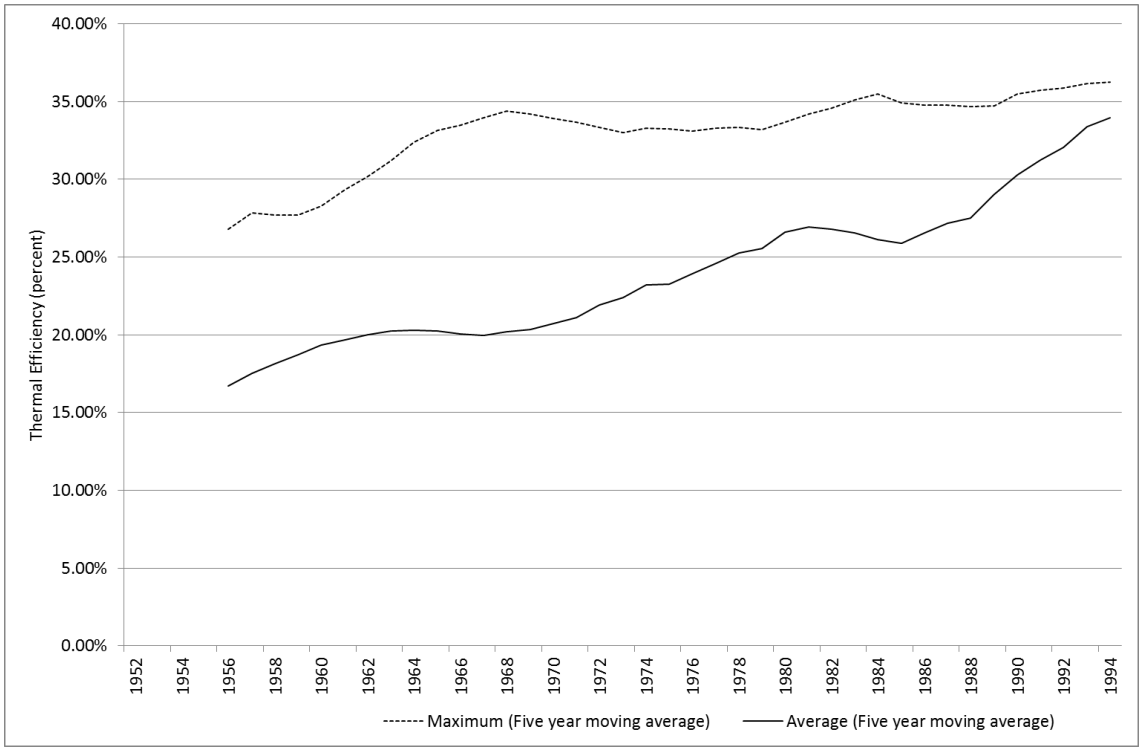

Figure 4.18 Maximum and average coal-fired thermal efficiency – 1952 to 1994.

Source: Data adapted from ECNSW, "Annual Reports," 1953 to 2000.

While high thermal efficiencies indicate the efficient utilisation of fuel it is, however, the actual cost of that fuel that has the greatest impact on the overall cost of electricity production. In 1978, for example, Liddell, the first base load station to use open-cut coal, had the lowest coal costs at $3.05 per MWh.[70] This compared with $5.69 per MWh at Vales Point B and $10.00 per MWh at Tallawarra B power stations.[71] In terms of total production costs, Liddell was lowest at $4.26 per MWh, with Vales Point B in mid-range at $6.39 per MWh and Tallawarra B the highest at $14.14 per MWh.

[70] The $/MWh figures discussed refer to the $/MWh Sent Out. This is $ value of the power produced in a power station minus the power used in the production process.

[71] *1980 Annual Review of Power Station Operations*: Power Division - Generation Group, 1980. Coal Cost - $/MWh S.O. and Total Production Costs - $/MWh S.O., 28-29.

Indicators of rapid growth and then long period of steady expansion

As noted earlier, the Electricity Commission's overall response to, first, the critical shortage of generating capacity and, second, the seemingly ongoing increase in demand involved the acquisition of existing generation assets and the construction of new power stations and transmission lines. An initial period of rapid growth in installed production capacity was followed by an extended period of steady, moderate expansion. The characteristics of these two phases can be illustrated by a review of a number of critical indicators. These include the extent of electricity sales, the magnitude of installed generating capacity, the length of HV transmission lines and the price of electricity sold.

In examining these indicators, it is important to note that for most of the period all were indicative of an expanding, cost reducing electrical supply organisation. Figure 4.19, for example, illustrates the increase in electricity sales.[72] From a base of 1121 GWh in 1952, sixteen of the following twenty-eight years experienced annual increases in the sale of electricity exceeding 1,000 GWh. In 1980, sales approached 30,000 GWh.

---

[72] *Annual Reports of the Electricity Commission of New South Wales / Pacific Power. Report of the Electricity Commission of New South Wales on Performance and Future Direction,* 17-24.

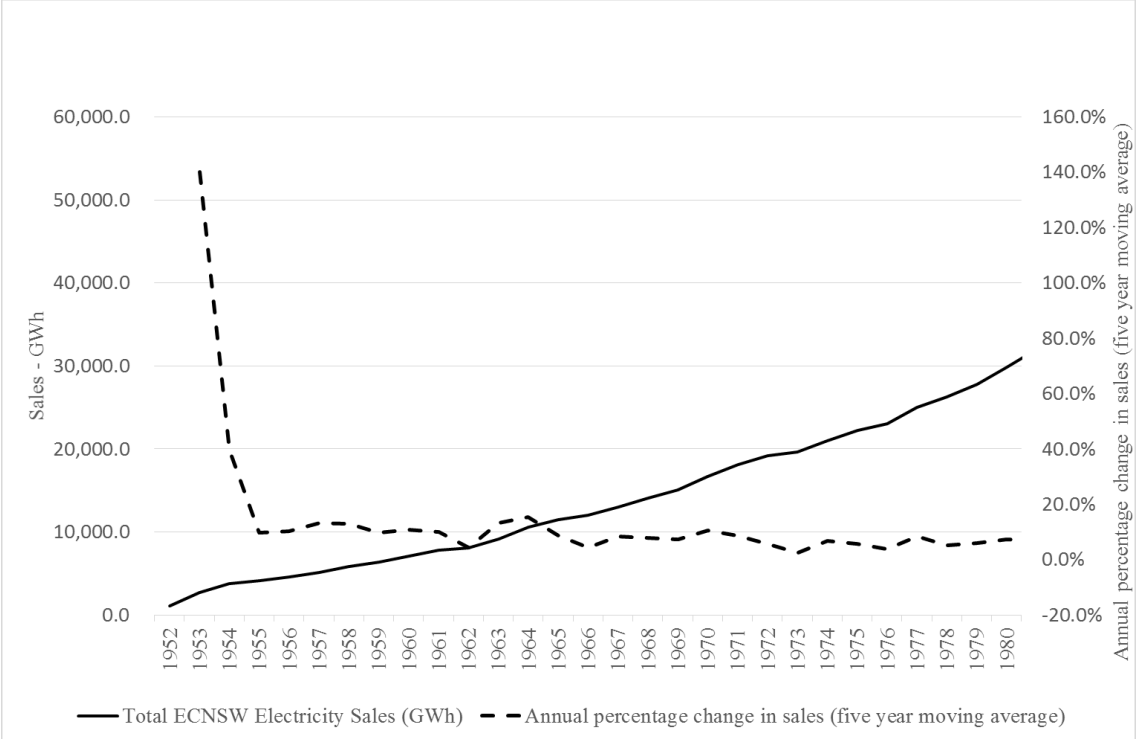

Figure 4.19 Total ECNSW electricity sales and the annual percentage change (five year moving average) 1952-1980.[73]
Source**:** Data adapted from ECNSW, "Annual Reports" 1953 to 2000.

Important as this trend is, it masks an equally significant development.[74] A review of the annual changes in electricity sales shows an initial period of rapid growth followed by

[73] While electricity sales were increasing in absolute terms over the period 1952-1995, the annual percentage change of that increase, while initially high, fell dramatically and from the mid-1950s declined at a slow rate.
The high annual changes of sales during the early 1950s, was a result of the pent-up demand being catered for by the commissioning of over 400 MW (fifty-two per cent increase) of new generating capacity between 1952 and 1955. From the mid-1950s, with sufficient capacity to meet demand, electricity sales were increasing albeit at a slowing overall rate.
Moving averages (MA) are used to identify the underlying trends in the data from which they are developed. In the examples used in this study, a five-year MA is used as a smoothing tool. A five-year MA is formulated by calculating the average of the values of years one to five. This establishes the initial MA value. The second MA value is calculated by deleting year one and adding year six, and so on.

an extended period of modest, positive, however, declining rates of growth. A similar trend is evident for system peak demand. These and related trends reflect the initially high annual changes as a consequence of the unfulfilled residential and industrial demand emanating from the war years, followed by lower, longer term changes, stemming from postwar prosperity – the golden years. During this period, actual production and peak demand were major inputs into the Commission's forecasting model. As such, they were a major influence on decisions on the amount of new generation capacity required. The total installed generation capacity and the associated annual percentage change (Figure 4.20) reflect this initial growth period followed by more moderate rates of expansion.

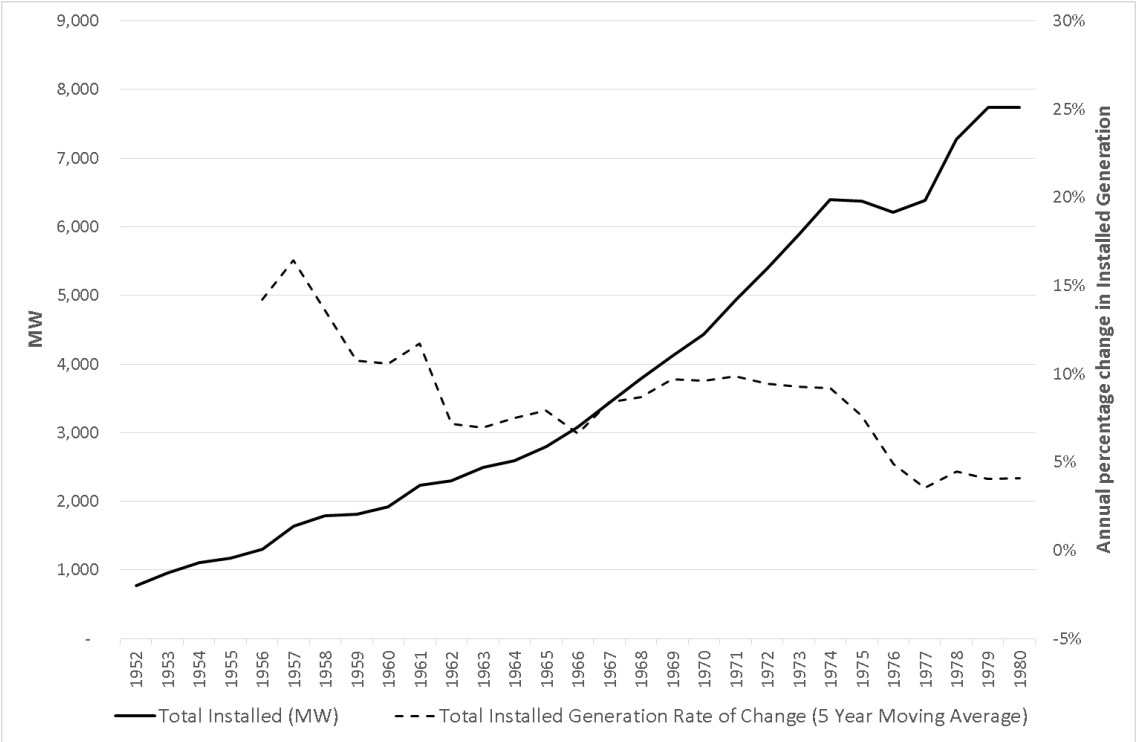

Figure 4.20 Total NSW installed generation and annual percentage change (five year moving average) -1952 to 1980
Source**:** Data adapted from ECNSW, "Annual Reports"1953 to 2000.

---

[74] G. D. McColl, "Economic Issues Facing Electricity Supply Authorities," *Australian Economic Review*, no. 72 (1985): 32.

While power stations are often viewed as the very visible public face of the electricity supply industry, the HV transmission lines are equally as important. Both form a functional partnership of service to the consumer. Each is rendered useless without the other. In parallel with the production capacity issues of the postwar period, the interconnected HV transmission system was equally in need of urgent development. The transmission systems of the pre-1950 generating authorities were fully loaded, if not overloaded during periods of high demand.[75] While each of these authorities, as with their generation developments, had attempted to increase transmission capacities and extend their networks, their efforts were restricted by shortages of materials, and skilled labour. As the output of individual power stations increased so the number, length and capacity of transmission lines increased. The rate of expansion of the HV interconnected system was greatest in the 1950s as a number of 132 kV transmission lines linking the coalfield stations and Sydney were constructed.[76] (See Figure 4.21) As with the trends of electricity sales and installed generation, the initially high annual percentage changes are followed by many years of modest but declining growth.

---

[75] *Annual Report of the Electricity Commission of New South Wales - for the period 22nd May, 1950, to 30th June, 1952,* 16-18.

[76] *The Electricity Commission of New South Wales - A General Outline of the Organisation and Activities of the Electricity Commission of New South Wales.*: 1965, 8.

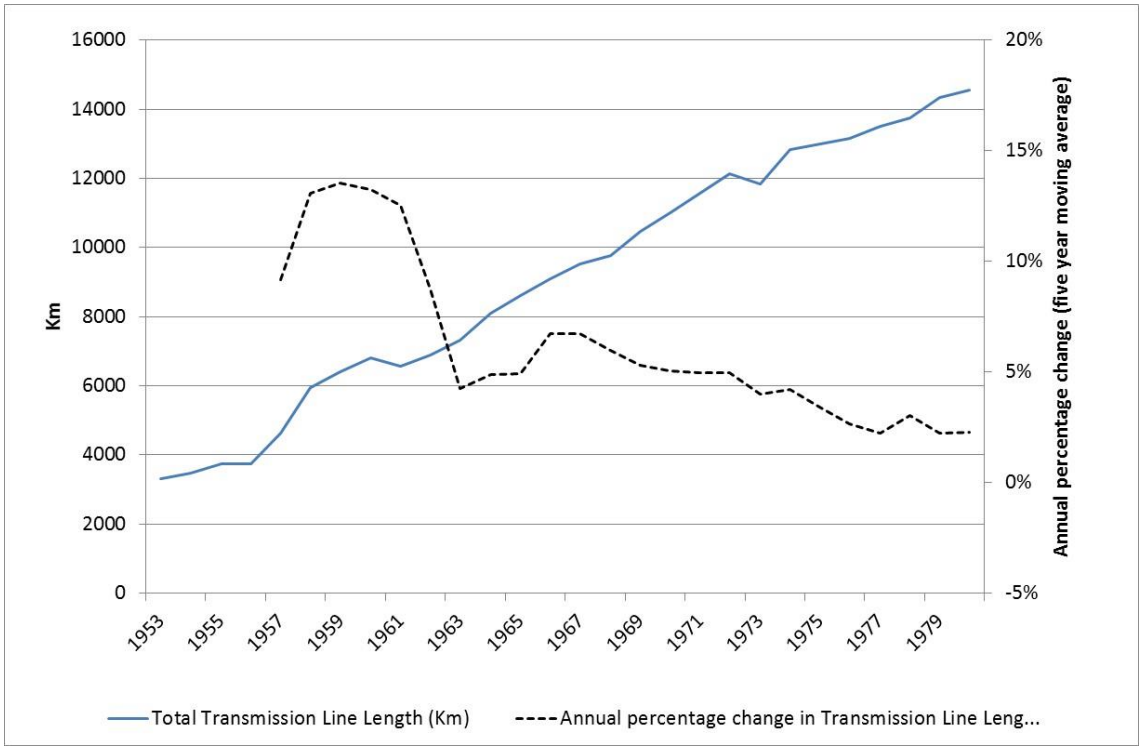

Figure 4.21 Transmission line length and annual percentage change (five year moving average) - 1950 to 1980
Source**:** Data adapted from ECNSW, "Annual Reports," 1953 to 2000.

Commencing in 1955, 132 kV, and later substantial 330 kV links to the networks of the Snowy Mountain Hydro-electric Authority (SMHA) and the SECV were also constructed. These were later extended to Sydney, the new northern power stations and the northern areas of the state. Figure 4.22 illustrates the 1955 interconnection to the Snowy Mountains Hydro-electric Authority and the 1959 connection to Victoria's SECV.

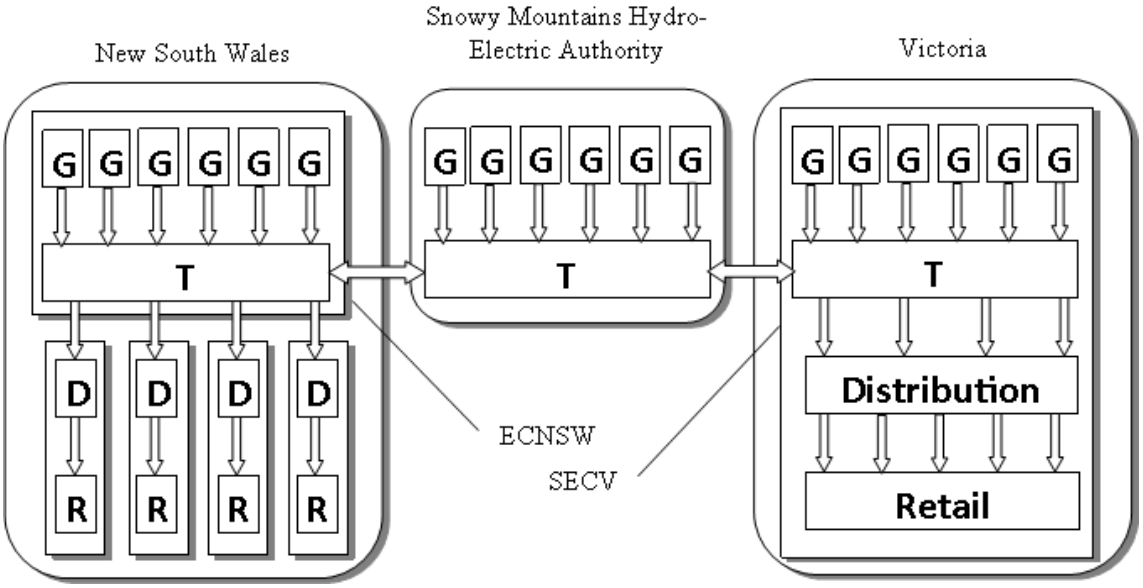

Figure 4.22 Interconnected interregional systems – December 1959

Despite an initial rise in the price of bulk electricity sold by the Electricity Commission in the early to mid-1950s, production costs and prices experienced moderate average annual decreases in the late 1950s and early 1960s, and moderate average annual rises from the late-1960s to 1980.[77] (see Figure 4.23) This is against a background of a four (4.3) per cent average annual increase in the Consumer Price Index over the period.[78]

---

[77] *Report of the Electricity Commission of New South Wales on Performance and Future Direction*, 24.

[78] Tim McMahon, "Historical CPI-U data from 1913 to the present," http://inflationdata.com/inflation/Consumer_Price_Index/HistoricalCPI.aspx?reloaded=true. [Accessed 30 March 2013].

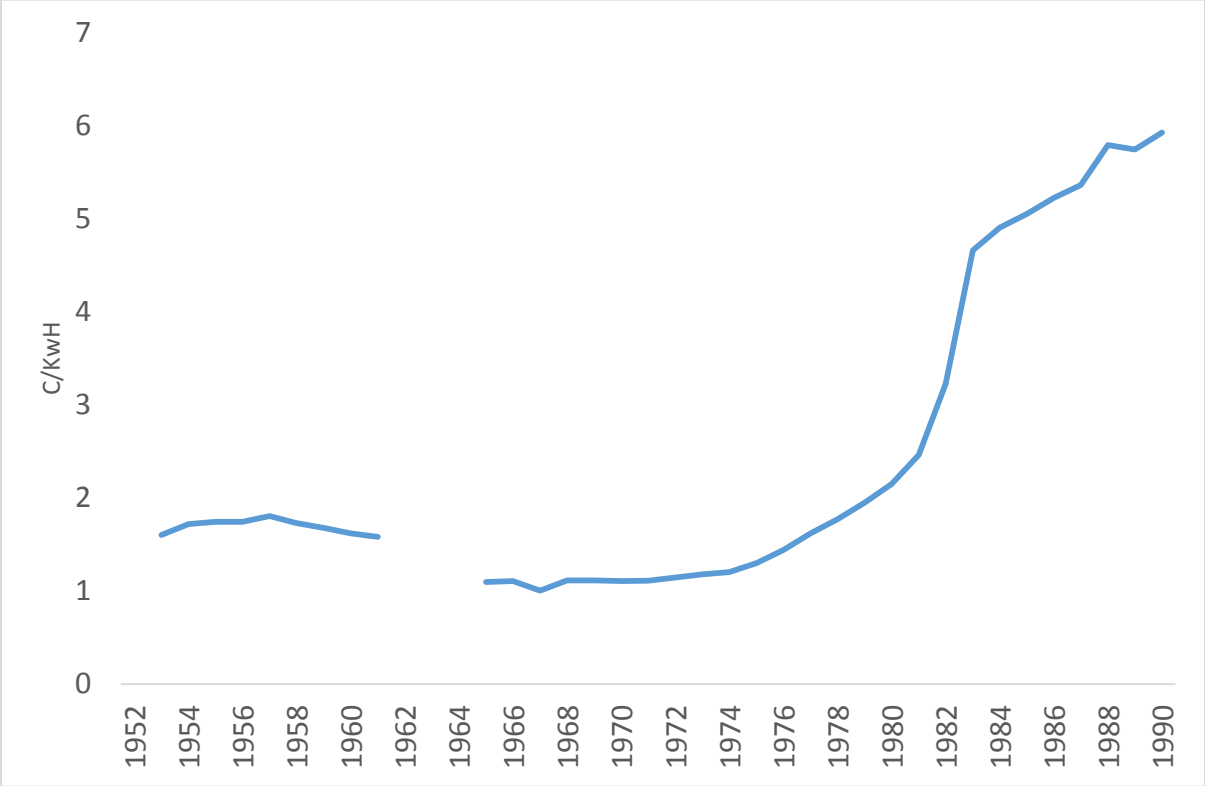

Figure 4.23 Average bulk price c/KWh. (Data for 1962 – 1964 unavailable)
Source**:** Data adapted from ECNSW, "Annual Reports," 1953 to 2000.

Three main factors contributed to these cost reductions.[79] The first related to lower fuel costs that were a consequence of siting new thermal generating plant at the fuel source and the advent of low cost open-cut coal. The second related to the benefits associated with economies of scale associated with newer generating units. Benefits included improved thermal efficiencies and reduced labour costs associated with increases in generator unit size. Tallawarra (commissioned 1954-1961), for example, with four 30 MW and two 100 MW units, produced 0.7 MW per employee, while Liddell's four 500 MW units (commissioned 1971-1973) achieved 2.8 MW per employee.[80] The third factor contributing to the cost reductions was the growth in the proportion of peak

---

[79] *Report of the Electricity Commission of New South Wales on Performance and Future Direction*, 22-23.
[80] *Report of the Electricity Commission of New South Wales on Performance and Future Direction*, 22-23.

demand met by hydro-electric stations, notably those of the Snowy Mountains Hydro-electric Authority.

From the mid-1970s a number of fundamental changes occurred in the costs of electricity production in NSW that resulted in a forty-nine per cent increase in the cost of supplying one KWh of electricity 1977 and 1982.[81] The main contributors to these increases included a decline in hydropower as percentage of the increasing demand for electricity. However, higher coal costs and increased financing charges were the main contributors. After the completion of Liddell (1973) and before Bayswater (1985) new generating capacity (Wallerawang 'C', Vales Point 'B' and Eraring) were fuelled from underground rather than open-cut mines. Any improvements in thermal efficiency that these new power stations embodied were not enough to offset the increased coal costs. The second significant contributor to increased costs between 1977 and 1982 was an eighty-four per cent increase in financing charges. Long-term debt increased 180 percent, while interest rates that had been under six per cent in 1973 were over twelve per cent in 1983.[82]

The commissioning of over 6,500 MW of new generating capacity in the thirty years to 1980 was, in part, a legacy of the 1946-1953 power crisis. Frank Brady, the Commission's Vice-Chairman, Chairman and General Manager between 1975 and 1987 suggested, "anyone who lived through a period like that has got a relatively conservative view of the importance of having adequate reserve capacity."[83] Brady recounts perhaps a more powerful adage that describes the subconscious attitude of many senior Electricity Commission managers in these years. The adage "no power is so dear as no power" suggests that the economic cost to the community, or the political cost to a government,

---

[81] *Report of the Electricity Commission of New South Wales on Performance and Future Direction,* 26-34.
[82] *Report of the Electricity Commission of New South Wales on Performance and Future Direction,* 26-34.
[83] Beatty, "Frank Brady. The First 30 Years - a race with demand," 13. Frank Brady, "Frankly Speaking", *Network*, Electricity Commission of New South Wales, November 1981.

of not having a reliable supply would often outweigh the cost of having to supply it in the first place.[84] Capital costs associated with the future provision of infrastructure only added to the equation. This adage, which any government or electricity supplier would be loath to deliberately test, nevertheless subconsciously guided many of the ECNSW's development decisions.

Transmission's role often overlooked

As noted previously, while power stations are crucial in maintaining acceptable electricity quality and quantity standards, the design and operation of the HV transmission network is equally crucial, but often overlooked by the public and media. This oversight highlights a misconception that HV transmission lines were constructed in isolation to the construction of power stations. For the ECNSW, nearly all of the transmission lines it constructed were part of an integrated program to bring electricity to the load centres. As electrical output from the Snowy Mountains Scheme became progressively available, the ECNSW commissioned a number of 330 kV HV transmission lines from the Snowy's switching stations to the load centres of Canberra and Sydney. These were in addition to the lines from the upper Hunter, Central Coast, western and southern power stations.

The Electricity Commission's statewide focus implied that it was required to supply electricity to consumers across the state. In 1950, for example, the transmission networks outside the metropolitan areas of Sydney, Newcastle and the Illawarra, were limited in the geographical area covered and the number of interconnections. By 1964, as Figures 4.24 illustrates, the HV transmission network had been extended to a substantial portion of the populated regions of the state and only limited by state borders. The small isolated power stations had, in the main, been removed from service or relegated to standby duty as their local distribution networks were connected to the Electricity Commission's network.

---

[84] Brady attributes this adage to Homi J. Bhaba (1909-1966), an Indian nuclear physicist and the first Chairman of the Indian Atomic Energy Commission. The current (2015) alleged 'gold plating' of the NSW high voltage transmission network could be attributed to TransGrid's, perhaps unconscious, application of "no power is so dear as no power."

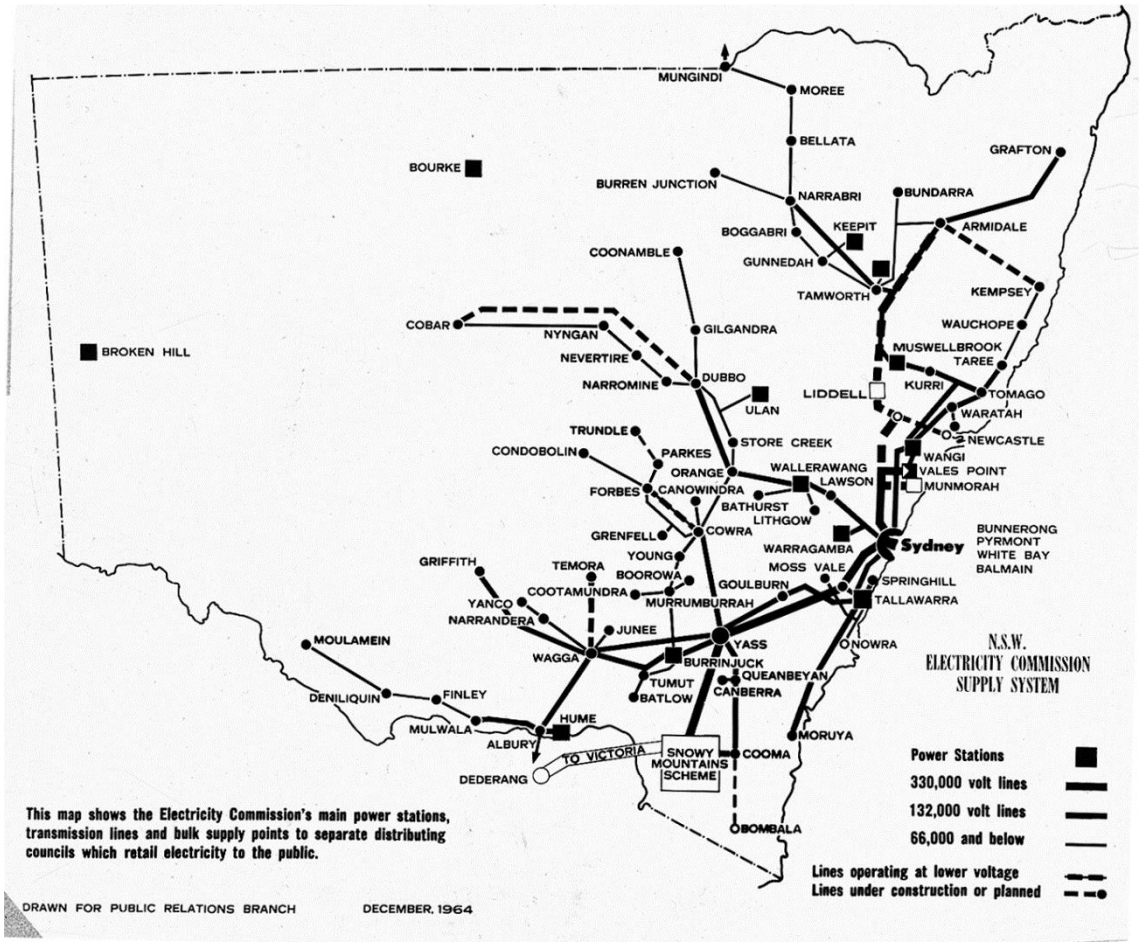

Figure 4.24 NSW HV transmission network, 1964 (ECNSW 05356)

Perhaps the most overlooked feature of the NSW network, however, is the multiplicity of HV connections between production and load centres, as well as between load centres. Maximising reliability of supply is the focus of this multiplicity. Failure of one source of supply is compensated by supply from an alternate source or via an alternate transmission route. Likewise, multiple transmission lines or lines of greater carrying capacity, are required if the load is in excess of a single transmission line. Equally significant, as far as security of supply to Sydney was concerned, is a double 330 kV ring of transmission lines and substations supplying greater Sydney as illustrated in Figure 4.25. As with the

transmission network in general, consumers are generally unaware of this so-called “ring of confidence.”[85]

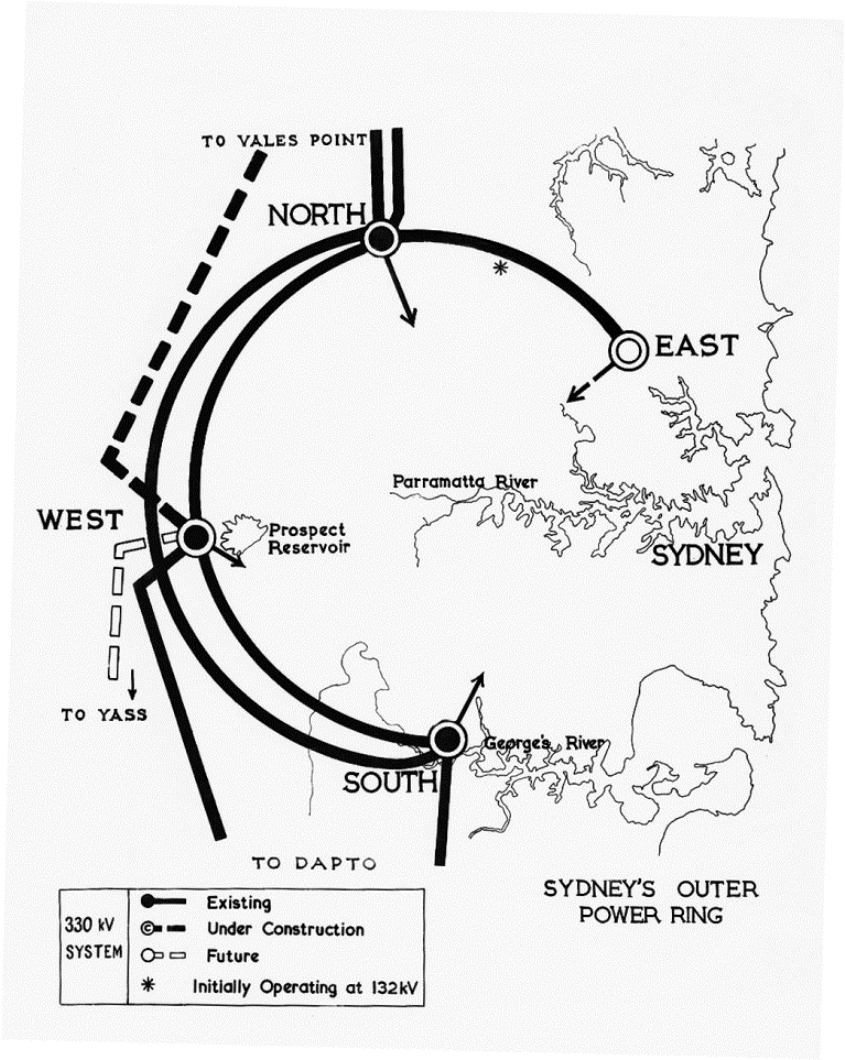

Figure 4.25 Sydney's double 330 kV HV transmission ring, January 1965 (ECNSW 05278)

For the Electricity Commission, the contrast between the growth of the HV transmission network that was inherited in 1950 - and that often years later - is clear.

[85] Interviewee L, Personal Communication, Interview or Questionnaire with author, 14 June 2011, 16 August 2012.

Prior to the Electricity Commission, there were many networks with limited interconnections. With the advent of the Electricity Commission, emphasis was on the statewide nature of the network, its centralised control and 'interconnectedness.' It continued to be referred to by its pre-1950 title - the 'Interconnected System'. By the mid to late 1950s, as the unique nature of "interconnectedness" became the norm rather than the exception, such terms as 'Transmission System' or 'Supply System' became more accepted.

Conclusion

The Electricity Commission's overriding requirement for its first thirty years was to ensure that adequate generating capacity was available to meet demand. Apart from this being a conventional objective of an electricity supply organisation, political expediency dictated that it be the case. While consumers were naturally frustrated with the postwar power restrictions and blackouts, by the mid-1950s memories of cold showers and cold meals would have faded for many people. It is, however, difficult to underestimate the effect the power crisis had on the Electricity Commission and especially its senior management. Reliability of supply, the underlying goal of the resolution of the power crisis, created a risk averse approach to planning for future expansion of production capacity and network security. This and the adage "no power is so dear as no power" manifested itself in reliability of supply being an overriding organisational goal. Such a conservative approach resulted in significant increases in generating capacity, the length of HV transmission lines and employee numbers. The adoption of the strategy of new coalfield-based generation coupled with the benefits of economies of scale and technological improvements highlights that technical issues were on a par with, or of greater import, than non-technical factors of politics and economics during this period.

For most of the period 1950-1980, past trends in sales and peak demand were used as indicators of future requirements. A fixation on the past, however, masked the true nature of the end-use of electricity. Initially, unfulfilled demand from the war years and immediate postwar years drove increases in demand. Increasing population and postwar prosperity further fuelled the demand for electricity through an increasing number of household connections, and a growing range of consumer appliances in each household. Declining production costs – benefits of new and improved generation assets – while

perhaps less obvious, were equally significant in encouraging consumers to use more electricity. By the late 1970s, however, electricity had become the dominant form of energy source for Sydney and NSW. Future increases in demand became a function of new connections and new electrical applications.

Chapter 5 The Golden Years - Politics, Industrial Relations and Nuclear Power (1950 – 1980)

Introduction

J.J. Cahill, the NSW Minister for Local Government and the executives of the newly legislated ECNSW, would have woken on 22nd May,1950 to a chilly Sydney winter morning.[1] For these gentlemen, this Monday was important as they planned to attend the inaugural meeting of the newly formed ECNSW. The significance of their appointment would not have been lost on them as they started their day. It is likely that many of them would have had to forego their morning cup of tea as a consequence of a nineteen-minute electricity blackout.[2] In the highly electrified twenty-first century, a nineteen-minute blackout, while serious, would likely be accepted as a one-off inconvenience. However, in 1950, this nineteen-minute technology related blackout was not a one-off occurrence. It was a continuation of blackouts and power restrictions that had commenced four years earlier. Even in the less electrified 1950s, the implication of these nineteen minutes and the hours and minutes lost over the previous months and years would not have been lost on the gentlemen attending the Electricity Commission's Board Meeting.

The intent of this chapter is to explore the nature of the Electricity Commission's relationship with the State Government. In particular the nature of the ECNSW as a statutory authority, and the benefits and drawbacks of such an arrangement are examined. Supplementary themes focus on the legacy of Harold Graydon Conde, the organisation's first Chairman, and the 1970s industrial campaign for a thirty-five hour working week. Conde, more so than other early senior managers, established the organisation's internal structure that was to last, largely unchanged, for over three decades. Moreover, he melded the inherited workforce cultures, work practices, and salary and conditions structures, into

---

[1] "Weather Map and Forecast", *Sydney Morning Herald*, 23 May 1950.
[2] "'Touch and Go' for Blackouts", *Sydney Morning Herald*, 23 May 1950.

a united organisation. While the thirty-five hour week campaign is not indicative of three decades of employee relations, for many of those involved it was either a long remembered high point of their trade union membership, or a low point for the animosity the campaign generated, not only between employer and employee, but also between employees of different trade unions and associations. The chapter's final supplementary theme can be characterised as a forgotten footnote to the history of the Electricity Commission. If it had been commissioned, Jervis Bay Nuclear Power Station, would have dramatically altered both the technical and organisational structure of the organisation and the power engineering industry in Australia. The Electricity Commission's direct involvement with nuclear power did not progress past mid-1971, nevertheless it is of importance, not so much for what eventuated, rather for what could have.

Cahill emphasises the practice of ministerial non-intervention

At the ECNSW's inaugural Board Meeting in May 1950, Cahill established the relationship between the government and the Commission that was to endure for over twenty years. In acknowledging the "magnitude of the task which confronted the Commission", Cahill commented that while the Act provided for ministerial control "it was not intended that there should be any interference on [my] part with the work of the Commission."[3] Conde confirmed this relationship in 1956 when he commented that it was his "experience the minister does not interfere in the domestic affairs of the Electricity Commission."[4]

This seemingly loose relationship between the State Government and the organisation during this period developed such that the ECNSW has been described as a "highly

---

[3] Electricity Commission of New South Wales, *Minutes of Board Meeting*, 22 May 1950, Item 1.1.

[4] Conde, *The Organisation of the Electricity Commission of New South Wales and an Outline of its Activities: a talk to the Royal Institute of Public Administration (N.S.W. regional group) on May 3, 1956*: 4.

visible … remote, politically powerful, [and] unaccountable" state owned organisation.[5] An early example of this apparent remoteness and unaccountability is evident in its reluctance to disclose the breakdown of the calculations that formed the Bulk Supply Tariff.[6] This was to the frustration of the SCC and other distributing authorities who argued that the price they had to pay for bulk electricity did not reflect the true costs of production.

The organisation's political influence is evidenced by the role played by the Commission's second Chairman, A.W.B. Coady, in the 1960s during the early planning stages for Liddell Power Station.[7] To maintain the decline in the price of electricity, the ECNSW believed that the next power station to be constructed after Munmorah (late 1960s) had to be fuelled by open-cut coal. Armed with the results of the Joint Coal Board's survey of the state's coal reserves, in 1960 Conde and Sykes, nominated a site between Muswellbrook and Singleton in the upper Hunter Valley. Initially called Hunter Valley #1, the station was named Liddell, after the nearby locality. At issue was the NSW Miners' Federation ban dating from the late 1940s and early 1950s on new open-cut coalmines in NSW. Recognising that there was high unemployment on the South Maitland coal fields, Coady negotiated with the Miners' Federation to lift their ban on open-cut mines in return for a guarantee that a new aluminium smelter would be located in the lower Hunter.[8] In addition to cementing the development of Liddell Power Station in the 1970s, by the 1980s this agreement would enable the ECNSW to develop the 2,640MW open-cut fuelled Bayswater Power Station in the same area.[9]

---

[5] McDonell, "N.S.W. Government Ownership and Risk Management in a Mandatory Pool - 'Neither Fish nor Fowl nor ...'" 79.
[6] Bulk Supply Tariff - a form of tariff a generating utility may charge a distributor/retailer for bulk electricity.
[7] Brady, "Electricity Supply in N.S.W. - the First Century and Beyond," 21.
[8] Alcan's Kurri Kurri smelter was commissioned in 1969.
[9] Brady, "Electricity Supply in N.S.W. - the First Century and Beyond," 27.

Management autonomy

In endeavouring to ensure a reliable supply to meet the increasing demand for electricity, H.G. Conde and subsequent Chairmen would have been mindful that while they reported to the relevant State Government minister, they enjoyed a high degree of autonomy. With the government absent from day-to-day operations, the engineer-dominated Electricity Commission became increasingly remote from both the government and the public. In part, this situation arose first as an outcome of the government establishing the ECNSW as a statutory authority, second as a consequence of the role played by Harold Graydon Conde, its first Chairman.

In his 1987 case study of the Reserve Bank of Australia, David Lewis identified a number of features of statutory authorities that may have influenced the NSW Government in its choice of an organisational structure for the ECNSW in 1950.[10] These included recognition of the limitations that normal government departmental structures would impose on a highly technical, trading organisation such as the ECNSW. The political interference in the SMC, which led to the formation of the SCC in 1935, suggested that a local government authority would also not be appropriate, and a statutory authority with an appointed rather than elected Board would distance the organisation from the excesses of political interference. Wilkenfeld, however, notes that the distancing of statutory authorities from political influence also distanced them from effective political control.[11] Wilenski goes further to argue that this distancing may have "fundamentally anti-democratic overtones."[12]

Lewis and Wilenski also note that statutory authorities enable governments to appoint specialists or representatives of sectional interests as Commissioners. The ECNSW's first set of Commissioners comprised three engineers – H.G. Conde, V.J.F. Brain, the

---

[10] David Lewis, "Statutory Authorities and Constitutional Conventions - The Case of the Reserve Bank of Australia," *Melbourne University Law Review* 16, no. 2 (1987-1988): 351.
[11] Wilkenfeld, "The Electrification of the Sydney Energy System, 1881-1986," 276.
[12] Peter Wilenski, *Directions for change: an interim report*, Review of New South Wales Government Administration., ([Sydney]: Govt. Pr., 1977). 55.

Chairman of the Energy Authority of NSW, and D.L. McLarty, Director of the State Dockyard; an economist – A.W.B. Coady from State Treasury; and the Secretary of the Electrical Trades Union, F.H. Campbell.[13] The small number of people occupying executive positions also enhanced stable relations with government over the period. In three decades, only twenty men were appointed to the Board, and only four men served as Chairmen.[14] Stability at senior management levels manifested itself in a consistency of vision and purpose. This was most evident in the organisation's technical agenda formulated and actioned by its first Chairman, Harold G. Conde and Chief Engineer, Fred Sykes.

For the ECNSW, the tendency for managerial autonomy as a consequence of a statutory authority structure was compounded by the sophisticated technical nature of the Electricity Commission's activities, and power station planning and construction cycles often being in excess of a government's minister's tenure. In the case of the SCC, the absence of external administrative and technical oversight contributed to its problems in the years prior to the formation of the ECNSW. For the SCC, as with the ECNSW, long periods of organisational autonomy ended when critical organisational issues assumed increased political significance.

Harold Graydon Conde

While the nature of a statutory authority laid the foundation of the relationship between the government and the ECNSW, it was Conde's managerial competence and the organisation's professionalism that fostered the relationship. Conde, (see Figure 5.1) came to the ECNSW with acknowledged expertise in both the managerial and power generation fields. Part of his early engineering career had been spent in New Zealand, the

---

[13] "Mr. H.G. Conde New Electricity Commission Head", *Canberra Times*, 16 May 1950.
[14] *Annual Reports of the Electricity Commission of New South Wales / Pacific Power.* H.G. Conde for nine years to 1959, A.W.B. Coady for 15 years, J.J. Hurley for four years and F. Brady for 4 from 1979 to 1982. Brady continued for a further five years as General Manager.

United Kingdom and the US.[15] In 1929, he joined the privately owned ELPSC, the operator of Balmain Power Station; was appointed Chief Assistant Engineer in 1934 and General Manager in 1938. Prime Minister Chifley appointed him to head the 1945 Commonwealth War Establishments Investigating Committee in efforts to hasten the demobilisation of Australian service personnel urgently needed in industry.[16]

As NSW Emergency Electricity Commissioner in 1949, Conde sought to bring a degree of coordination, at least in day-to-day operations, to the fragmented electricity supply system. In addition, he advised the government, as had a number of earlier reviews, that the fragmented structure of the electricity supply industry was hindering the development of the NSW electricity supply industry and resolution of the postwar power crisis.

---

[15] Vallance, "Conde, Harold Graydon (1898 - 1959)" [Accessed 4 June 2008].
[16] ———, "Conde, Harold Graydon (1898 - 1959)" [Accessed 4 June 2008].

Figure 5.1 Harold Graydon Conde - 1959 (ECNSW 02239)

Of Conde's nine years as the head of the Electricity Commission, his efforts, along with those of other employees, in resolving the postwar power crisis, stands out. This crisis, at least from a consumer's perspective lasted seven years (1946-1953). Virtually three years to the day after assuming control of NSW's electricity generation and transmission assets, the ECNSW lifted the final power restrictions in May 1953. Under Conde's guidance, the assets and employees from the four major fragmented authorities were melded into an organisation that was to secure reliable electricity supplies for NSW over the following fifty years. The basic organisational structure introduced in 1950 remained in place until the early 1980s when the Chairman's role in the day-to-day duties of managing the organisation was transferred to the new position of General Manager. Conde's other legacy, the establishment of large coalfield-based power stations, would have occurred under other managers. It is, however, unlikely that it would have taken

place, to the extent and at the rate it did, if the generation industry had not been centralised.

Conde's sudden death in October 1959 at the early age of sixty was unexpected and only seventeen days before his political supporter, Premier J.J. Cahill, died.[17] Only a month earlier Conde was reported to have been looking well and in high spirits.[18] While it is unlikely his death was related to the stress and pressures associated with being at the centre of a critical industry, NSW nevertheless, was robbed of a dedicated and influential public servant. Public recognition of his achievements and contribution to the postwar development of NSW, seemingly absent in his lifetime, was forthcoming following his death. Premier J.J. Cahill commented, "in NSW it can be said truthfully, he [Conde] built an electrical empire which will forever be linked with the name of Harold Conde."[19] In a similar vein, R.W. Askin, Leader of the NSW Opposition and the Liberal Party, noted that Conde "personally accepted the stigma that necessarily went with the candlelight era, he was the pathfinder of those dark days."[20]

Thirty-five hour week campaign

It would be unrealistic to expect an organisation as large as the Electricity Commission to have been free of industrial relations disputes. Union influence and militancy at Bunnerong and other power stations in the 1940s continued into the 1950s and beyond. However, the union campaign of the 1970s for a thirty-five hour working week in the Commission's Generation Division stands out as perhaps the low point in relations not only between the Electricity Commission and its employees, but also between groups of employees. Although not indicative of the state of industrial relations across the entire

---

[17] David Clune, "John Joseph (Joe) Cahill (1891 - 1959)," http://adb.anu.edu.au/biography/cahill-john-joseph-joe-9659. [Accessed 29 August 2014].
[18] "Death of Mr. H. G. Conde", *Network*, Electricity Commission of New South Wales, 14 October 1959.
[19] "Tributes From Many Quarters", *Network*, Electricity Commission of New South Wales, 14 October 1959.
[20] "Tributes From Many Quarters".

Commission at the time, it was nevertheless a critical issue occupying the attention of senior management and two state governments for a decade. It also highlights that critical industrial relations issues in enterprises are often driven by forces external to it. In the thirty-five hour week dispute, the organisation's management and employees were pawns in the political and industrial relations manoeuvrings of two state governments and a number of trade unions.

While the details of the opposing arguments in this long industrial campaign were paramount at the time, they have generally been forgotten. However, the actions of a small group of unionists and the responses of the State Government and the Electricity Commission remain etched in the memory of many of those involved. This campaign, and particularly the period 1972-75 was "a terrible period in the history of the Electricity Commission and the history of the industry."[21] The campaign was characterised by numerous instances of employee walkouts; bitter vilification of union members by other unionists; and employee imposed limitations on the levels of electricity production. Restrictions on the use of power imposed during the campaign were reminiscent of the postwar restrictions; while not as prolonged, or as frequent, they arguably had a greater short-term effect because of the greater level of industrial, commercial and residential electrification.

The political implications of the thirty-five hour issue (cost and potential flow-on) meant the Electricity Commission's response was largely dictated by the state Liberal government.[22] Nonetheless, in the midst of the dispute the Electricity Commission had to manage, as best it could, the day-to-day power situation. This proved a difficult task, especially during those periods when power station operating staff used their control of the power production process as an industrial relations tool. The *Sydney Morning Herald*

---

[21] . Frank Brady was Electricity Commission Vice Chairman (1975-1978), Chairman (1978-1982), General Manager (1982-1988)

[22] The Liberal led coalition conservative government were successful in the state elections of 1971, 1973 and 1976. The Labor Party won the 1978 election.

described this situation as a “cat and mouse game with the entire state electricity system at stake.”[23]

The union campaign for a thirty-five hour working week can be divided into three distinct phases or episodes. The first commenced in October 1970 when a union deputation representing wages and some salaried members presented Electricity Commission management with a demand for a reduction in working hours from forty hours per week to thirty-five.[24] Their claim was based on the substantial industry productivity improvements of the previous two decades. In many respects, the claim had a degree of merit. Based on increases in electricity sales (1,387 per cent), and employee numbers (131 per cent), between 1952 and 1970, employee productivity had increased 545 per cent. [25] Technological improvements, many requiring increased employee skill levels associated with increasing generator output, were also a feature of the claim. In 1952, the largest generating unit connected to the NSW interconnected system was 50 MW. By 1970, the 350 MW units at Munmorah were the largest, with the first of the 500 MW units at Liddell scheduled to be commissioned in mid-1971.

In response to a number of industrial stoppages, overtime bans and other maintenance and operational limitations, the Government and the Electricity Commission were forced to implement a series of power restrictions and unscheduled blackouts from mid-1971. While the *Sydney Morning Herald* labelled the actions by the power unions as “undisguised coercion,” the State Government nevertheless referred the issue to the State Industrial Commission for consideration.[26] In rejecting the union claim (following a thirteen-month inquiry), the Industrial Commission argued that the productivity improvements through the expenditure of public money should be shared by the community as a whole and not restricted to a select group of workers.[27] The State Labor

---

[23] John O'Hara, "Cabinet Advises: Hold Firm", *Sydney Morning Herald*, 3 October 1973.
[24] Fred Wells, "35-hour Week Move", *Sydney Morning Herald*, 7 October 1970.
[25] *Annual Reports of the Electricity Commission of New South Wales / Pacific Power.*
[26] "Blackouts?", *Sydney Morning Herald*, 11 June 1971.
[27] ———, "No 35hr week for Power Workers", *Sydney Morning Herald*, 14 February 1973.

Council viewed the decision as "one of the worst blows directed against workers by the arbitration system in its seventy-year existence."[28] For many power station union members, the decision meant that direct negotiation and direct action were seen as their only avenue to pursue the goal of a shorter working week.

The Industrial Commission's decision heralded the second and most significant phase of the campaign. This part of the dispute process was significant for the levels of union militancy, power union members deliberately reducing electricity production levels during the winter of 1973, and the vilification of some union members and their families by other unionists.

To achieve their goal of restricting the quantity of electricity produced, power station operators and maintenance staff applied a two-pronged strategy. The first was to either not repair selected plant that had failed, or refuse to return plant to service after repairs had been completed.[29] The *Sydney Morning Herald* reported that by mid-June Munmorah and Bunnerong Power Stations had been closed by strike action, and two units at Vales Point were being operated at minimal load. The remaining two Vales Point generating units were out of service awaiting maintenance.[30]

A prominent feature of the campaign's second phase was the strength of the power station shop floor stewards. This was no more evident than in the control of the production dispatch process as an industrial relations device. In early March 1973 they, and not the Labor Council, decided that union members would deliberately reduce electricity production during the coming winter months. For a number of weeks in mid-1973, operating staff at all power stations elected to take generator dispatch orders from a small group of senior operators, principally located at Munmorah Power Station.[31] While

---

[28] ———, "No 35hr week for Power Workers".
[29] "State Government Invokes Power Ration Law", *Sydney Morning Herald*, 22 June 1973.
[30] "NSW Power Crisis Eases for Weekend", *Sydney Morning Herald*, 23 June 1973.
[31] Under normal circumstances, two interlinked processes govern the real-time relationship between demand and supply. To maintain system frequency the network's automatic frequency control equipment directs a nominated generating unit to make small second-by-second

this small group of operators regularly consulted with the System Controllers at the State Control Centre, for many weeks they assumed control of the production dispatch process with the specific aim of ensuring that supply levels were less than that required to meet the demand. Their actions in turn led to the power restrictions and blackouts experienced at that time.

As potentially dangerous as these unauthorised adjustments could have been to the safe operation of the network as a whole, the most disturbing aspect of the entire campaign were the actions of a small number of unionists, again principally at Central Coast power stations. In earlier industrial campaigns, and in the early stages of the thirty-five hour campaign, power station engineers had at times assumed power station operation duties when the normal operating staff withdrew their labour. As the campaign progressed, engineers and maintenance supervisors were subjected to threats and intimidation by other union members. During one incident at Munmorah Power Station, engineers had to run the gauntlet of a picket line manned by maintenance staff who were preventing repairs to the station's coal conveyors. This particular incident became known in the organisation's mythology as the "Night of the Long Shovels."[32] There were instances of car tyres being slashed and intimidation and verbal attack of engineers and supervisors. Anecdotal evidence suggests these activities reached an unacceptable low point when some of the families of engineers were subjected to abusive telephone calls. This, the Munmorah coaling incident, and similar incidents, prompted the NSW branch of the Association of Professional Engineers to recommend that its members only work their normal shifts until the ECNSW and the State Government could guarantee their safety and the safety of the families.[33] Engineering staff subsequently took no further part in the

---

incremental changes in output. However, larger, or block movements in electricity production in response to variations in system demand, or scheduled or unscheduled plant activity, would be directed to individual power stations by the Electricity Commission's System Control Division at their Carlingford Control Centre.

[32] Interviewee L, Personal Communication, Interview or Questionnaire with author, 14 June 2011, 16 August 2012.

[33] "Intimidation Charge", *Sydney Morning Herald*, 25 June 1973.

Electricity Commission's response to the union campaign, other than to perform their normal duties. The Electricity Commission acknowledged their decision and did not request their further assistance in these sorry events.

In a move to avert a potential major industrial work stoppage by power unions, in July 1973, Premier Robert Askin agreed to refer the thirty-five hour campaign issue to the State Industrial Commission for a second time.[34] Rather than asking the Industrial Commission to consider the entire NSW electrical industry, the government requested that only the power generation industry be considered. Not surprisingly, in September 1973 the Industrial Commission again rejected the union claim, this time on the grounds of its inflationary effect and the potential flow-on to other industries. The Industrial Commission rejected the union argument that the power generation industry and the Electricity Commission in particular, had a unique economic capacity to absorb the changes when compared to other industries. Further, with the possible exception of power station operators, the Industrial Commission recognised that other trades and occupations involved in the campaign had peers in other industries, and thus the potential for the flow-on if the claim was granted.

The third distinct phase of the thirty-five hour week campaign commenced in October 1973 – a month prior to the November state election. In a strategic change of approach, the NSW Labor Council and the Labor opposition recommended that electricity production restrictions be lifted and that the focus of the campaign shift from industrial action to a political campaign to elect a Labor government at the next state election. While the Liberal government was re-elected, the union did not revert to their assertive industrial campaign, rather the focus remained the next state election.

With the election of the Labor government in 1976, Premier Neville Wran and Minister for Mines and Energy, P.D. Hills, ever mindful of the militancy of the power unions, indicated that the government would not oppose an application to the Industrial

---

[34] John O'Hara, "Power Men's Claim to Get New Hearing", *Sydney Morning Herald*, 24 July 1973.

Commission for a shortened working week. Through protracted negotiations, power station workers were awarded a thirty-seven and a half hour week in June 1979 and a thirty-five hour week in January 1981.[35]

The industrial relations tactics employed by the union movement had, in the main, been developed and implemented by shop floor union representatives in the power stations. Nonetheless, they were in response to a strategy developed by the wider trade union movement. For the power union members, the honour of spearheading the union movement's campaign was frustrating, protracted, and at times, bitter and unpleasant. Confrontational union activities had been unsuccessful; industrially motivated power restrictions and blackouts had failed to sway the resolve of the Government and the Electricity Commission. Yet the goal was achieved, not through industrial action, rather through a change of government.

The tactics employed by the Electricity Commission during the thirty-five hour campaign had been largely directed by the Liberal State Government's strategy of resisting the trade union demands. However, opinions varied on the thirty-five hour campaign and the Electricity Commission's handling of it. Electricity Commission senior management viewed the period 1972 to 1975 as a "dreadful period of disputation"; a period whose legacy of ill will and mistrust remained for over a decade.[36] A senior manager at the heart of the Electricity Commission's response somewhat proudly commented that during 1971 to 1976 "we held the fort" against the thirty-five hour campaign.[37] However, he noted that the Liberal government's and Electricity Commission's initial hardline strategy of not wishing to overly inconvenience the public with power restrictions had prolonged the dispute and was counterproductive to its early resolution. In contrast, a number of non-Generation Division Head Office engineers were less than flattering in their views on how the Electricity Commission management

---

[35] Keith Martin, "Bid to Lift Barrier on Shorter Hours", *Sydney Morning Herald*, 15 May 1981.
[36] Brady interviewed by Hamilton, October - November 1996.
[37] Interviewee L, Personal Communication, Interview or Questionnaire with author, 14 June 2011, 16 August 2012.

managed the dispute. One believed that the Generation Division, over many years, had lost control of industrial relations in its power stations, and this had been a major influence on poor plant availability and the need to expand generating capacity.[38] Such a comment could equally have been applied to the SCC's management of industrial relations at Bunnerong and Pyrmont in the 1940s. Equally critical of the Electricity Commission were some engineers at Central Coast power stations who were responsible on a day-to-day basis for maintaining generation output as best they could; dealing on a day-to-day basis with rolling strikes, stop work meetings and intimidation by some unionists.[39]

ECNSW and atomic energy

An often forgotten aspect of Australia's, and particularly the Electricity Commission's, electricity production activities, was their venture into nuclear energy between 1950 and 1971. The Commission's involvement in the Commonwealth Government's and the Australian Atomic Energy Commission's nuclear power ambitions, had they been fulfilled, would have changed the face of electricity production in NSW and Australia. However, as the project was cancelled before major construction commenced it is only a footnote to the history of the organisation.

The ECNSW had peripheral involvement with nuclear power during its first twenty years. From the early 1950s to the mid-1960s, this involvement would appear to have been in the role of an electricity generator wishing to keep abreast of the latest developments in nuclear power technologies. On at least three occasions, the ECNSW sent delegations to international conferences on the peaceful use of atomic energy.[40] In 1960 for example, V.J.F. Brain, the ECNSWs first Vice-Chairman, and Chief Engineer Fred Sykes, were both members of the Australian Atomic Energy Commission's

---

[38] Interviewee B, Personal Communication, Interview or Questionnaire with author, 4 July 2011.
[39] Interviewee H, Personal Communication, Interview or Questionnaire with author, 8 February 2011; Interviewee M, Personal Communication, Interview or Questionnaire with author, 22 October 2010.
[40] *Annual Report for the Year ended 30th June 1959*: 1959, 6.

Scientific Advisory Committee along with other notable persons in the field, namely Philip Baxter and Mark Oliphant.[41] At the time of his death in 1959, H.G. Conde was the Chairman of the Nuclear Power Committee of the Electricity Supply Association of Australia (ESAA).[42]

Throughout the 1950s, Brain and Sykes were of the opinion that nuclear power electricity generation was not an economic option in the NSW context.[43] Brain, however, believed that Australia should consider building a nuclear power station in order to gain the necessary skills and knowledge. By early 1957, based on British experience, he estimated that the production costs associated with atomic power had fallen to the extent that "the atom will soon take the lead from coal?"[44] Following Brain's death in June 1957, Conde reiterated the Electricity Commission's view that nuclear power remained uneconomic and, significantly, added that its introduction should be based on sound practical and economic grounds, and not on issues of national pride or for research and development purposes.[45] Following Conde's death in late 1959, Sykes reiterated the ECNSW's opinion that the state's natural resources were sufficient to meet all its needs for the foreseeable future and that "there was little or no likelihood of nuclear power becoming economically favourable... before some indeterminable point of time beyond the year 1975."[46]

These pragmatic anti-nuclear opinions are to some extent characterised by an Electricity Commission public relations campaign in 1959 to promote the recently announced Vales Point Power Station. In November of that year the organisation's Public

---

[41] Sykes, "Development of the Electrical Supply System and the Future of Nuclear Power in New South Wales," 137.
[42] "Experts Say Atomic Power Uneconomic", *Sydney Morning Herald*, 11 September 1959.
[43] V.J.F. Brain, "Atomic Power-house Uneconomic but Essential", *Sydney Morning Herald*, 6 January 1955.
[44] ———, "Nuclear Power Cost Decreasing", *Sydney Morning Herald*, 25 March 1957.
[45] "Experts Say Atomic Power Uneconomic".
[46] Sykes, "Development of the Electrical Supply System and the Future of Nuclear Power in New South Wales," 146.

Relations Office presented a ‘shop front’ window display in its Sydney Head Office with nuclear power juxtaposed with coal-fired thermal power stations. Calder Hall, Britain’s first nuclear power station, is contrasted with the Electricity Commission’s, soon to be operational, Vales Point Power Station. (see Figure 5.2)

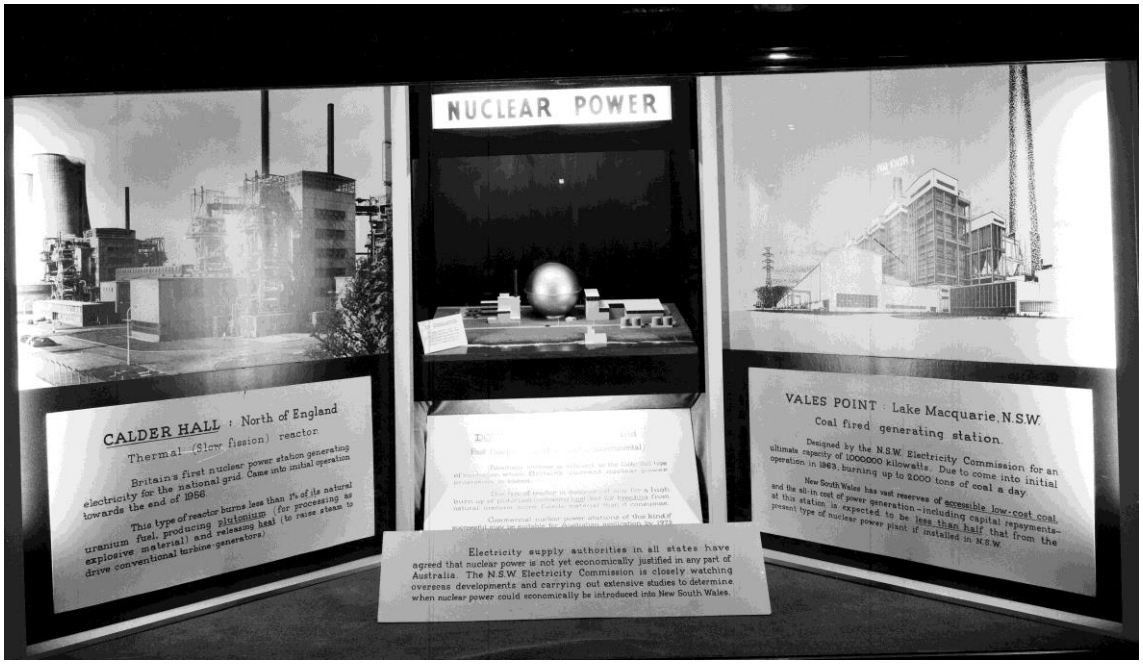

Figure 5.2 Shop Front Window Display Nuclear Vs Coal-Fired - November 1959 (ECNSW 02359)

The display makes the observation that NSW “has vast reserves of accessible low cost coal” and that the overall cost of the station is less than half that of a nuclear station of comparable output. The point is made that while “nuclear power is not yet economically justified in any part of Australia”, the Electricity Commission nevertheless was monitoring overseas developments to “determine when nuclear power could economically be introduced into NSW. Significantly, especially in the light of future developments, these comments were made in the context of the Electricity Commission acting alone, and not in partnership with federal or private authorities.

Despite this less than enthusiastic opinion of nuclear power in NSW, by the mid-1960s, the ECNSW was increasingly being drawn into a national investigation of the technology’s economic viability in an Australian context. In December 1964, the *Sydney Morning Herald* reported on a study conducted by the SECV, the Australian Atomic

Energy Commission (AAEC), the Snowy Mountains Hydro-electric Authority, and the ECNSW into the economic feasibility of nuclear power.[47] The study confirmed the ECNSW's view that nuclear power "was unlikely to prove competitive with conventional power stations within ten years."[48] Nonetheless, the ECNSW continued to maintain an open mind about the technology. Indicative of this continuing interest was the 1964 secondment of a number of Electricity Commission engineers to the United Kingdom's Central Electricity Generating Board to gain experience at nuclear power stations. One of these engineers spent nine months at the Board's north Wales Trawsfynydd Power Station during the commissioning of two Magnox reactors.[49]

By the late 1960s, the ECNSW's involvement changed from one of monitoring developments to one of active participation in the AAEC's attempts to put "Australia into the nuclear age."[50] In part, the Commission's involvement was a consequence of the Commonwealth having no constitutional power to produce electricity, and the AAEC being limited to matters related to the discovery, mining, use and disposal of uranium.[51] These constraints on the Commonwealth necessitated the involvement of a state electricity generating authority. In mid-1969, the *Sydney Morning Herald* reported on the imminent announcement of the Commonwealth Government's decision to construct a nuclear power station at Jervis Bay South on the NSW South Coast.[52] Apart from the obvious requirement of a source of cooling water, the choice of Murray's Beach on Jervis Bay South as the preferred site was based primarily on the need for the reactor to be located on Commonwealth territory for security reasons. It also had to be adjacent to an

---

[47] "Nuclear Plant Talks in Two States", *Sydney Morning Herald*, 7 December 1964.
[48] "Nuclear Plant Talks in Two States".
[49] Interviewee C, Personal Communication, Interview or Questionnaire with author, 8 and 21 December 2010.
[50] Michael Symons, "$120M Nuclear power plant in NSW likely", *Sydney Morning Herald*, 8 May 1969.
[51] A.M. Moyal, "The Australian Atomic Energy Commission: A Case Study in Australian Science and government," *Search* 6, no. 9 (1975): 372.
[52] Symons, "$120M Nuclear power plant in NSW likely".

electricity transmission and distribution system large enough to accommodate the station's 500 MW output.[53] While the site was the Commonwealth's preference, an August 1969 Electricity Commission drawing identifies a number of locations the ECNSW considered as potential sites. (see Figure 5.3) These included Spencer on the Hawkesbury River; Talbingo and Waste Point in the Snowy Mountains; Bass Point, south of Wollongong; Red Point on Jervis Bay North; and Cotter and Uriarra near Canberra. (see Figure 5.3)

The ECNSW's 1970 Annual Report notes that the Commission was collaborating with the AAEC in the "planning and evaluation of the Commonwealth's nuclear power station at Jervis Bay.[54] The extent of this collaboration was significant in that a number of ECNSW employees were involved on a full-time basis. This included one person as a member of a four-person team dispatched to the US to draw up the tender specifications in conjunction with the AAEC's consultants, the Bechtel Corporation.[55]

The division of responsibilities between the Commonwealth and the ECNSW was essentially a function of the technical responsibilities each had. The reactor would be owned by the AAEC, on behalf of the Commonwealth. The ECNSW would buy the reactor's heat energy output (steam) from the Commonwealth and convert it into electrical energy that it delivered to its own bulk electricity transmission network.[56]

The ECNSW's commitment to the Jervis Bay project was, however, problematic. As noted above, Conde and Brain in the 1950s, and Sykes in the 1960s, repeatedly identified the nuclear power as uneconomic as a solely a NSW exercise. The Commission's

---

[53] Alder, *Australia's uranium opportunities*: 37-51. Binnie, "From atomic energy to nuclear science: a history of the Australian Atomic Energy Commission," 201.
[54] *Annual Report for the Year Ended 30th June 1970*: 1970, 12.
[55] Alder, *Australia's uranium opportunities*: 40. Binnie, "From atomic energy to nuclear science: a history of the Australian Atomic Energy Commission," 209.
[56] _____, "From atomic energy to nuclear science: a history of the Australian Atomic Energy Commission," 186, 225.

commitment to coal as its main fuel source would reinforce the

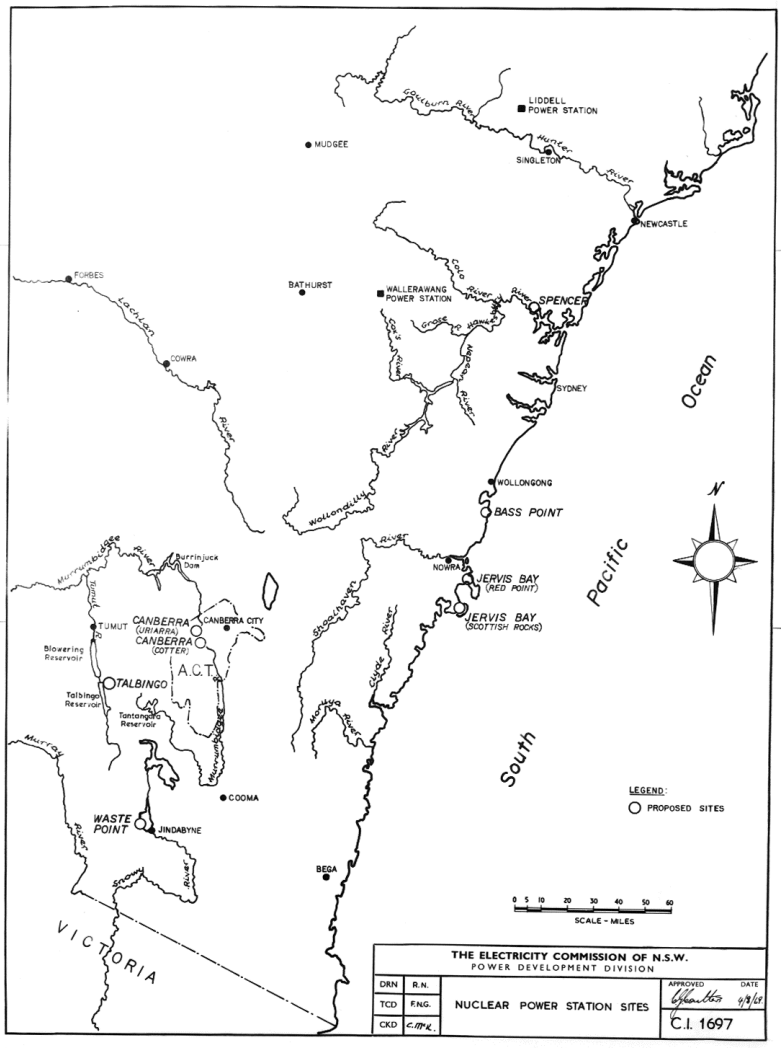

Figure 5.3 Nuclear Power Station sites – August 1969 (ECNSW 09303)

organisation's reluctance to be involved in nuclear power on its own. Further, the ECNSW power station expansion plans were made with little if any acknowledgment of the possibility of Jervis Bay's output being available in the medium to long-term future.[57] The commissioning of the first of four 500 MW coal-fired generating units at Liddell was

[57] "The nuclear power bungle: Was Jervis Bay Mr Gorton's final fling?", *Australian Financial Review*, 3 June 1971; Alice Cawte, *Atomic Australia, 1944-1990* (Kensington, NSW: NSW Press, 1992).

scheduled for 1971 and an additional 6000 MW over the following fifteen years. Nevertheless, when approached by the AAEC, the Electricity Commission could not afford not to be involved in the nuclear project. While it would be required to buy the heat output of the reactor, it would not be required to contribute to the reactor's capital or operational costs. Under these circumstances, the ECNSW could not ignore the project. For a heavy engineering organisation that prided itself on its technical and managerial expertise, the requirement for the ECNSW to be responsible for operation and maintenance of the electricity generating facilities was an added inducement. Having to provide the station's Superintendent was a final incentive, particularly for those senior ECNSW managers with nuclear engineering qualifications.[58]

Overall, it appears that the ECNSW's involvement was more of a consequence of political agreement between the Commonwealth and NSW, and the availability of a large block of electricity free of a major portion of the capital costs to provide it. As noted above, the ECNSW's earlier opposition to nuclear power was in the context of it having to finance the construction and operation of the entire facility, including the reactor and electricity generation facilities. Now that the Commonwealth had elected to finance the construction and operation of the reactor, the ECNSW was more at ease in fulfilling its traditional role as the operator of electricity generating infrastructure.[59]

After reviewing tenders the AAEC and its principal consultant, Bechtel, failed to agree on the type of reactor to recommend to the Federal Government. Bechtel, supported by the ECNSW, opted for either the German or American enriched-uranium reactors, whereas the AAEC recommended the unproven British Steam Generating Heavy Water Reactor for its use of natural uranium, its superior safety, and its additional capability of

---

[58] "Commonwealth-State agreement on Proposed Nuclear Station", *Network - Official Monthly Newspaper of the NSW Electricity Commission*, Electricity Commission of New South Wales, October 1970. Brady interviewed by Hamilton, October - November 1996.

[59] Interviewee L, Personal Communication, Interview or Questionnaire with author, 14 June 2011, 16 August 2012.

being "a good plutonium producer."[60] Any nuclear ambitions the AAEC and the ECNSW may have had were thwarted in June 1971 when the new Prime Minister, William McMahon, deferred the project.[61] McMahon's opposition to the project centred on the cost being twice the initial estimate and it not being an economic source of electric power.[62] The future of Jervis Bay may have survived the decision to opt for the British offer, however, it foundered on the political manoeuvrings within the Liberal party and the election of McMahon as Prime Minister. His history of opposition to the project, and his appointment as Prime Minister, foreshadowed the project's end. Cynically, McMahon reportedly commented to the AAEC, "how can I possibly approve a nuclear power station when I'm faced with the need to cut preschool education in Canberra."[63]

Conclusion

Once the NSW Labor government had decided to centralise the generation and transmission industry, two primary objectives were paramount; the resolution of the four years of power restrictions and blackouts and second, the implementation of plans to provide a reliable supply of electricity to all of NSW into the future. Recent experience had shown that a fragmented industry could not meet these goals. In addition, how could organisations subject to undue political interference, and whose executives did not have appropriate levels of management and engineering expertise hope to resolve current and future critical issues.

These concerns eliminated both a local government structure and a government department. In opting for a statutory authority arrangement, J.J. Cahill, would have recognised the technical and organisational advantages of appointing qualified Board

---

[60] Moyal, "The Australian Atomic Energy Commission: A Case Study in Australian Science and government," 375. Binnie, "From atomic energy to nuclear science: a history of the Australian Atomic Energy Commission," 253. Cawte, *Atomic Australia, 1944-1990*: 130.
[61] *Cabinet Minute - Decision 195*: 1971.
[62] Binnie, "From atomic energy to nuclear science: a history of the Australian Atomic Energy Commission," 255.
[63] Alder, *Australia's uranium opportunities*: 50.

members to oversee and direct the engineering, financial and other functions of the organisation free from undue political interference. To Cahill's credit, distancing himself from the planning and operation of the organisation, as he expressed at the inaugural ECNSW Board Meeting, set the tone of the relationship between the government and the ECNSW that was to continue for over two decades.

Cahill's 'hands off' comment at the ECNSW's inaugural Board Meeting, was in many respects, not a government distancing itself from critical events affecting the state. Rather, it is evidence of Cahill's high regard for Conde and his team's ability to resolve the state's electricity issues. Besides leading the organisation in its resolution of the postwar power crisis, in his nine years as Chairman, Conde established an internal organisational structure that endured for over three decades. Similarly, he resolved the differences in work practices, employee wages and conditions inherited from the four fragmented electricity authorities, and promoted an organisation culture that looked to the present and the future, and not back to past organisations. In the twenty-first century, Conde's legacy remains, be it unacknowledged. Remnants of the organisational structure he created are evident in TransGrid, AGL Macquarie, Delta Electricity and at Origin Energy's Eraring Power Station. However, it is the physical location of many of the state's current power stations adjacent to their fuel source that bear witness to Conde and his team's foresight.

For many employees of the ECNSW, and especially those working in the power stations and regional transmission centres, the relationship of the organisation to the State Government was not their first priority; they were focused on the day-to-day production and transmission of bulk electricity. As such, at least three aspects were prominent – their workplace companions, the plant and equipment they operated or maintained, and finally their involvement in major workplace events. In this last category, many employed during the 1970s recall their involvement in the thirty-five hour week campaign. Whether they recall withholding their labour; being locked out of their place of work; being lectured by a senior manager on the strike provisions of their terms of employment; producing electricity under sometimes trying conditions; or developing and implementing strategies to counter militant trade union activities, each person has a different set of memories. However, long after the intricacies of the dispute have been forgotten, long after the

interplay between senior ECNSW management and the government have faded, many people, both management and trade unionist, generally focus on just three aspects of the dispute. First, that both management and trade unionist were ‘pawns’ of higher authorities. Specific parts of the workforce spearheaded the wider trade union strategic push for a shorter working week, while the State Government directed the ECNSW management’s responses to manage the situation. Second, the unusual tactics employed by a small number of trade unionists to commandeer control of the production dispatch process as an industrial relations tool. However, as notable as these two aspects were, it is the third aspect of the dispute that stands out. Animosity between employer and employee, while often not in the best interests of both parties was evident, yet may be seen as a normal aspect of the industrial relation process. However, in this dispute the level of animosity, and the levels of physical and psychological intimidation between employee groups were most alarming. One group of employees had to pass through picket lines established by another group of employees. One group interfering with the personal property of another group of employees, and of most concern, if accurate, anecdotal evidence, to suggest that the family of one employee was subjected to telephone intimidation in relation to the dispute.

Had the ECNSW’s involvement with nuclear power and Jervis Bay Power Station come to fruition, the power engineering environment of NSW and Australia would have been dramatically altered. That Jervis Bay did not proceed beyond receiving tenders, does not lessen the project’s significance in the history of the organisation. Despite being less than enthusiastic about embracing nuclear power as a NSW only project, the organisation chose to be involved in the AAEC’s desire to construct a nuclear power station. Two factors were at the heart of this decision. New production capacity would contribute to the ECNSW’s overall goal of reliability of supply, and second, the Commonwealth would provide much of the capital works expenditure.

Jervis Bay’s cancellation in 1971 was a setback in the AAEC’s nuclear ambitions. For the ECNSW, the loss of 500 MW of potential production capacity was overshadowed by the imminent commissioning of the 2,000 MW coal-fired Liddell Power Station. Perhaps the only ECNSW employees concerned with the cancellation of Jervis Bay were those with aspirations of a career in nuclear power generation.

Grounded on a relative absence of political and public scrutiny, the three decades to 1980, were ‘golden’ years of technological advancement and growth for the ECNSW. While ever questions of reliability of supply or the price of electricity were not being asked in Parliament or in the media, the ECNSW and its activities were not issues of concern. The following decade, the 1980s, the subject of the next chapters, was far from ‘golden.’ Major technical failures affecting reliability of supply heralded intense political and public scrutiny, as power restrictions and blackouts, increases in the price of electricity, and perhaps ironically, production overcapacity, became critical issues.

Chapter 6 A Decade of Contrasts (1980 – 1988)

Introduction

Entering the 1980s, the management and employees of the ECNSW could be forgiven for displaying a sense of optimism for the coming decade. In its thirtieth year, many considered the Electricity Commission a robust and technically competent public organisation. In reviewing the organisation's three decades, the employee newsletter, *Network*, contrasted 1980 with 1950, the year the Electricity Commission was formed.[1] A 7,000 MW demand in 1980 contrasted with 700 MW in 1950. The largest generating unit in 1950 was 50 MW compared to 660 MW in 1980. The length of high voltage transmission lines had increased from 3,303 km to over 14,000 km. For the first time, all Head Office staff were located in a single high-rise office block in Sydney's CBD rather than scattered in rented accommodation throughout the city. Employees in new power stations and transmission centres had acquired an identity of their own – identifying first as Electricity Commission employees and second as working at a particular power station or transmission centre. This contrasts to the earlier period when people, willingly, or otherwise, transferred to the newly formed Electricity Commission, and while working at the same place, that location still carried the signage of its former owners.

With forecasts of strong growth in electricity sales driving construction of new generating and transmission capacity, this chapter reflects on a number of contrasting aspects of the Electricity Commission in the 1980s.[2] First, the excitement associated with an unequalled power station construction program was countered by major technical failures at the ECNSW's premier power station, and failure to coal Eraring, the organisation's soon to be premier power station, from an adjacent open-cut mine. For an organisation that prided itself on its engineering expertise, these two setbacks were dramatic and challenging, in both their occurrence and consequences. Second, public and

---

[1] "Special Anniversary Supplement", *Network*, Electricity Commission of New South Wales, 22 May 1980. *Annual Reports of the Electricity Commission of New South Wales / Pacific Power*.
[2] *Annual Report for the Year Ended 30th June 1981*: 1981, 5.

media questioning of the Electricity Commission's power pricing policies to new and existing aluminium smelters challenged the organisation particularly amid concerns of residential consumers subsidising the price to the smelters. Allegations of an absence of transparency in these negotiations added to the issues that management had to contend with. Third, while both the ECNSW and the government had reliability of supply as a priority, the point of contention in the mid-1980s, was how to achieve this goal. The Electricity Commission sought to ensure "no power is so dear as no power" through continued expansion, while the government baulked at the cost and suitability of a policy that, had it been proposed in the early twenty-first century, would possibly be characterised as *gold plating*.[3]

This chapter also examines a number of additional themes including, the innovative financing of major capital works, and the technical innovations that established Eraring Power Station as the new technical standard for ECNSW power stations in design, construction and operations.

Faltering optimism with the Liddell generator failures

The basis for the optimism, and with it the challenge for the 1980s, was the prospect of electricity sales maintaining the momentum of previous years. The annual changes of electricity sales, while not at the high levels of 1964 (15.4 per cent) or the 10.7 per cent of 1970, was a respectable 7.3 per cent in 1980.[4] Similar annual changes were forecast for the coming decade, especially with the anticipated energy requirements of two new aluminium smelters and an upgrade to a third. Based on a projected eight per cent annual increase in sales, the equivalent of one 660 MW generating unit needed to be commissioned each year to 1984, then increasing to over 1,000 MW in each of the following years to 1990. For a power engineering organisation committed to providing a reliable supply, and one that prided itself on its engineering expertise, a construction and

---

[3] Brady interviewed by Hamilton, October - November 1996.
[4] *Annual Reports of the Electricity Commission of New South Wales / Pacific Power.*

commissioning program of this magnitude was viewed as daunting, but a challenge that could nevertheless be achieved.

The optimism engendered by the prospect of a decade of the construction of 6,600 MW of new generating capacity was, however, challenged in 1981 by the failure, within an eight month period, of three of the four 500 MW generators at Liddell. These were not 'normal' failures, such as boiler tube leaks, or a turbine bearing with higher than normal vibration levels; rather each generator failed from the more serious stator winding faults.[5] The initial Liddell unit to fail (#3) occurred on 26 March 1981. Normally the loss of a single generating unit would have been covered by other ECNSW generating units and NSW's allocation of Snowy Hydro output. However, at that time two Munmorah units (each of 350 MW capacity) were out of service with boiler tube hydrogen embrittlement issues. To continue to meet demand, the ECNSW progressively drew down on its share of the Snowy's short-term water resources. By early June 1981, the Snowy was unable to continue supply, resulting in the gazetting of power restrictions in late June. This situation was further exacerbated in November 1981 with the failure, in similar circumstances, of two additional 500 MW Liddell generators. Additional power restrictions were imposed for twenty days in December 1981, and twenty-six days in March/April 1982.[6] To assist in alleviating these restrictions older generating units at Pyrmont, and White Bay Power Stations in the Sydney CBD, in addition to Muswellbrook and Koolkhan Power Stations in regional NSW, were rehabilitated and recommissioned.[7] An additional 300 MW was commissioned with the purchase of twelve

---

[5] *1981 Annual Review of Power Station Operations*: 1981, 44. To illustrate the significance of these failures, each of the three Liddell generating units were out of service for in excess of ten months. In the winter of 1981, the loss of the first 500 MW unit equated to approximately a seven per cent reduction in the ECNSW's available capacity. During the periods of enforced power restrictions in December 1981 and March/April 1982 with three 500 MW units unavailable, this equated to approximately a twenty-seven per cent reduction in generating capacity. By the winter of 1982, with two 500 MW units out of service, twelve per cent of capacity was unavailable.
[6] *Annual Report for the Year Ended 30th June 1982*: 1982, 10.
[7] *Annual Report for the Year Ended 30th June 1982,* 15-16.

25 MW Emergency Gas Turbine generating units.[8] This desperate period of power restrictions was alleviated with the commissioning of the first 660 MW unit at Eraring in March 1982.

The ramifications of the Liddell failures and proposals for the development of future generation facilities were two of a number of politically related issues that the organisation had to contend with during the decade. Politically, the Electricity Commission of the early to mid-1980s was the subject of three government initiated inquiries. These were the 1982 NSW Ombudsman's inquiry into maintenance procedures at Liddell Power Station; the 1983 internal report into the organisation's *Performance and Future Direction*; and the 1986 McDonell *Commission of Inquiry into Electricity Generation Planning in NSW.* [9] While the circumstances leading to each inquiry differed in many aspects, they were milestones in the history of the organisation.

Arguably, the 1982 Ombudsman's inquiry into the generator failures at Liddell was the first time the ECNSW's engineering management processes had been openly questioned, not only by the government, but also by the public and external commentators. Of the decade's major inquiries, it had the narrowest terms of reference. These did not extend to the determination of the causes of the generator failures, nor to form conclusions on allegations of design or manufacturing defects. The Ombudsman was only empowered to inquire into allegations of the ECNSW's inadequate generator inspection and maintenance procedures at Liddell. The Ombudsman concluded that the Commission's decision not to follow the generator manufacturer's rigorous inspection procedures was

---

[8] *Annual Report for the Year Ended 30th June 1982,* 16.

[9] State Records Authority of New South Wales: 2010, *Records of an Inquiry under Section 19 of the Ombudsman Act, concerning alleged inadequate maintenance procedures by the Electricity Commission at Liddell Power Station. NRS 10871. 1982. Report of the Electricity Commission of New South Wales on Performance and Future Direction.* G. J. McDonell: *Commission of Inquiry into Electricity Generation Planning in N.S.W,* 1986.

justified.[10] He did, however, note that the Commission had erred in not consulting the manufacturer concerning this decision and that it had failed to implement an alternate inspection and maintenance program. While the Ombudsman was unable to inquire into the actual causes of Liddell failures, the Commission conducted its own inquiry, which was supplemented by a number of investigations by independent consultants. Weaknesses in the design and materials used in the failed components were identified. Not surprisingly, the Commission considered these weaknesses to the main cause of the failures.[11]

As with the Ombudsman's inquiry, the 1983 inquiry into the organisation's *Performance and Future Direction* was an outcome of the power restrictions brought on by the Liddell incidents. While conducted internally, it was heavily influenced by management consultants, McKinsey and Company. Frank Brady, the Electricity Commission's General Manager at the time, commented that it was a "watershed for the Commission [as it was] no longer possible to quietly plan and build power stations with the avoidance of shortages as [the] only publically measured performance index."[12] Industry commentator, Robert Booth, described the *Performance and Future Direction* report as "a marvel of clarity" and "most uncharacteristic of Commission documents [for] its frank discussion of problems."[13] Rather than focusing on just one aspect of the

---

[10] English Electric, the generator manufacturer, recommended that the rotor of each generator be removed for inspection of it and the generator stator. This procedure would involve a shutdown of approximately 14 weeks. The ECNSW argued that with four inspections to be carried out each year, the station's output would be permanently reduced by twenty-five per cent. ("Annual Report for the Year ended 30th June 1984," Sydney. Electricity Commission of New South Wales, 1983, 50).

[11] *Report of the Electricity Commission of New South Wales on Performance and Future Direction*, 47.

[12] B Beatty, "Frank Brady: Those Ten Turbulent Years," *Australian Electrical World* 53, no. 14 (1988): 13-14.

[13] ———, "Frank Brady: Those Ten Turbulent Years," 13-14. Booth, *Warring tribes - The Story of Power Development in Australia*: 81-82. Rosenthal and Russ, *The Politics of Power - Inside Australia's Electric Utilities*: 12-13.

Commission's activities, the inquiry made wide ranging recommendations to improve the organisation's financial management, industrial relations and operating activities.[14] In all, there were eight major actions and recommendations. Of these, changes to the top level management structure in order to provide greater accountability for measurable performance was significant. These included the strengthening of management processes incorporating performance goals and budgets. In the light of these maintenance issues at Liddell, programs to improve plant operating and maintenance procedures as well as plant reliability were recommended. As industrial relations issues, again principally at Liddell, contributed to the protracted length of the power crisis, programs to improve this crucial organisational function were also recommended.[15] The report's openness is illustrated by comments on labour costs and productivity. In the five years to 1982, employee productivity, as measured by energy generated per employee, increased by only 1.5 per cent per annum against a 6.3 per cent per annum increase in employee numbers. [16] This disparity was compounded by substantial increases in indexed real wages per employee that were above the average NSW male weekly earnings.[17] Increases in employee numbers were attributed mainly to additional staff being employed in the design, construction, and operation of new power stations at Vales Point and Eraring. The report also noted that increases in employee wages were partly due to the high levels of employee overtime being worked.

The inquiry's discussion of the contentious issue of industrial relations, particularly at Liddell, also illustrates the report's uncharacteristic frankness. While the Commission's industrial relations performance on a man-days lost per employee basis compared

---

[14] *Report of the Electricity Commission of New South Wales on Performance and Future Direction,* 3.
[15] *Report of the Electricity Commission of New South Wales on Performance and Future Direction,* 55.
[16] *Report of the Electricity Commission of New South Wales on Performance and Future Direction,* 70.
[17] *Report of the Electricity Commission of New South Wales on Performance and Future Direction,* 71.

favourably with the SECV and other Australian industries, such a statistic is misleading.[18] Lost time disputes by a small number of skilled employees in critical areas can be disruptive and out of proportion to the actual working days lost. This was evident in the industrial action taken at the height of the power restrictions in early 1982 by a small number of contractors who delayed the commissioning of the first generating unit at Eraring.[19] Of the Commission's four major power stations, Liddell accounted for seventy-three per cent of all working man-days lost due to industrial disputes in the five years to 1982.[20] This coupled with an eight per cent resignation rate of Liddell tradespersons in the same period highlights the staffing and skill retention issues confronting Liddell management. The report also notes that the underlying causes to industrial disputes and high staff turnover are often not evident in the statistics. In Liddell's case, high staff turnover was a direct consequence of the station's proximity to higher paying employment in the open-cut coalmining industry. While immediate resolution of the staff turnover issue was, to a degree, outside the Commission's control, resolution of the underlying causes of high levels of industrial disputation was in its control. By publically acknowledging its belief that employees looked to the Commission for fair and effective industrial relations, the organisation was in part accepting that their past efforts in this crucial area had not been adequate.

Demand for electricity slows

In previous chapters, increasing population, increase in the number of connections, and increased consumption per connection, were identified as major inputs leading to the increasing demand for electricity. Residential electrification had progressively culminated in the connection of most existing Sydney dwellings by the end of the 1930s and the connection of most existing rural dwellings by the early 1970s. Electrification of most

---

[18] *Report of the Electricity Commission of New South Wales on Performance and Future Direction,* 53.
[19] *Annual Report for the Year Ended 30th June 1982,* 16.
[20] *Report of the Electricity Commission of New South Wales on Performance and Future Direction,* 55.

household tasks had been achieved by the early 1970s, and ownership levels of electrical equipment and appliances had reached near saturation.[21] Any future increase in residential demand was a function of new customers being connected and the consumer appliances they bought. The loss of momentum in demand was further compounded by the cancellation of one of two new aluminium smelters and postponement of an upgrade to a third. The forecast eight per cent annual growth in demand declined to below five per cent by 1987 and three per cent by 1989.[22] While the 2,640 MW power stations at Eraring and Bayswater had been commissioned in 1982-1984 and 1985-1986 respectively, by the end of the decade, low demand growth, leading to generation overcapacity, meant the 1,320 MW Mt Piper Power Station, originally scheduled for 1988, was deferred and not commissioned until 1992-1993.

Compounding this slowing of the growth in demand was an increase in the costs of electricity production and the subsequent cost of electricity sold. The ECNSW's price for electricity had fallen an average of 4.2 per cent per annum between 1958 and 1980. [23] However, this had bottomed out in the mid to late 1970s and trended sharply upwards in the early 1980s. Production cost advantages associated with the siting of base load power stations, improved thermal efficiencies, economies of scale, and open-cut mines as a fuel source at Liddell, had all but been exhausted. Unplanned production cost increases were incurred with the failure to gain approval for the Eraring open-cut mine. This meant that only Bayswater promised fuel costs comparable to Liddell.

Comparison of general production costs with the experience of US electricity supply utilities in the 1970s and those of the ECNSW in the 1970s and 1980s is informative for their similarities and differences. Between 1973, the year of the oil restrictions imposed by Organisation of the Petroleum Exporting Countries (OPEC) and 1981, the cost of

---

[21] Wilkenfeld, "The Electrification of the Sydney Energy System, 1881-1986," 264.
[22] *Annual Reports of the Electricity Commission of New South Wales / Pacific Power.*
[23] *Report of the Electricity Commission of New South Wales on Performance and Future Direction,* 22. Exhibit 2-7 Cost of Electricity Sold by the Commission - 1957/8 to 82/3.

electricity in the US increased fifty-five per cent.[24] As with the NSW cost increases, both were related to the cost of fuel – oil in the US and coal in NSW. Similarly, both jurisdictions experienced declines in the annual increases in demand, but in different decades. In the US, the annual growth in sales of electricity averaged seven per cent through the 1960s and early 1970s, and by 1980 it had fallen to three per cent. Whereas the annual growth in NSW demand declined to similar levels in the following decade – three per cent by 1989.[25] Contributing to the decline in annual growth rate in the US, were lower national economic growth rates in the 1970s, and late in the decade, the advent of organised energy conservation programs (many at the utilities initiative.)[26] In revising downward projected load growth through the 1970s, coupled with limits encountered to improvements to thermal efficiency and economies of scale, many US utilities were forced to cancel planned capital investments in generating plant. Richard Hirsh has characterised the US industry in this period as experiencing technological stagnation and decline or technical "stasis."[27] The industry experienced a transformation from supplying increasing amounts of electricity at declining prices, to one in depression with near stagnant growth and rising prices and vulnerable to the economic forces that were disabling the overall US economy.[28]

Onset of generation overcapacity

Important as the reversal in the trend in production costs was, the major outcome of the slowing in demand was the issue of generation overcapacity. In the mid to late 1970s,

---

[24] *Report of the Electricity Commission of New South Wales on Performance and Future Direction,* 90-92.
[25] *Report of the Electricity Commission of New South Wales on Performance and Future Direction,* 90. *Annual Reports of the Electricity Commission of New South Wales / Pacific Power.*
[26] *Report of the Electricity Commission of New South Wales on Performance and Future Direction,* 90.
[27] Hirsh, *Technology and transformation in the American electric utility industry*: 2. Hirsh defines 'stasis' as the"cessation of technical advances in an industrial process technology."
[28] _____, *Technology and transformation in the American electric utility industry*: 1-2.

the Commission had forecast that the growth in consumption would average between six and eight per cent per annum over the following decade.[29] As noted earlier, a significant proportion of this growth was associated with industrial development in the Hunter Valley, notably new aluminium smelters at Tomago and Lochinvar scheduled to be commissioned in the mid-1980s. Accordingly, the NSW Government wishing to attract this potential development, began investing heavily in the provision of the required electricity supply infrastructure. Notwithstanding that Vales Point B had been commissioned in 1978-1979, and Eraring scheduled for 1982-1984, in 1980 the ECNSW placed contracts for an additional 3,960 MW (Bayswater 2,640 MW and Mt Piper 1,320 MW).[30]

Despite the cancellation of the Lochinvar aluminium smelter in April 1982, the Electricity Commission persevered in advocating additional generating capacity after the commissioning of Mt Piper Power Station scheduled for the late 1980s or early 1990s.[31] Even with a reduced forecast annual load growth, the Commission estimated that it would be necessary to construct one new 660 MW generating unit each year from 1994 to 2002.[32] This equated to two new power stations, each of a similar size to Eraring. The 1983 Annual Report identified a number of sites that the Commission considered had potential for future development.[33] These included Tallawarra, Foybrook, Mt Piper 3 and 4, Burragorang, Tuggerah (Mardi/Chittaway Point) and Olney. [34] These additional stations appear to have been ambitious projections on the part of management, perhaps unconsciously as a commitment to the maxim “no power is so dear as no power.”[35]

---

[29] *Report of the Electricity Commission of New South Wales on Performance and Future Direction*, 12. Rosenthal and Russ, *The Politics of Power - Inside Australia's Electric Utilities*: 32.
[30] *Annual Report for the Year Ended 30th June 1980*: 1980, 5.
[31] "Lochinvar Blow", *Sydney Morning Herald*, 26 April 1982.
[32] *Proposed Power Developments on the Central Coast*, 1984, 4.
[33] *Annual Report for the Year Ended 30th June 1983*: 1983, 45.
[34] *Annual Report for the Year Ended 30th June 1984*: 1984, 41.
[35] Brady interviewed by Hamilton, October - November 1996.

Equally, these plans were partly the response of an organisation beset by poor power station operational availability, and one wedded to the resolution of this issue through the construction of new production capacity.[36]

One of the first public announcements of these expansion proposals appeared in the Commission's September 1984 *Proposed Power Developments on the Central Coast*.[37] While only a call for public discussion on possible sites for future power stations, this publication prompted Peter Cox, the Minister for Mineral Resources and Energy, to voice the government's position on future power station development.[38] The government, while not endorsing the Commission's plans, nevertheless noted that a government decision for any expansion of generating capacity beyond Mt Piper would be made only after the ECNSW completed a thorough review of its development plans. The tenor of the government's pronouncement conveys the impression that such a decision would not necessarily be the traditional rubber-stamp of previous ECNSW expansion plans.

In questioning the Electricity Commission's plans, both the government and the public voiced concerns about the proposed financial investment and the setting aside of prime residential and commercial land for a major power station. The September 1984 publication illustrates that, while the Commission had heeded the findings of its 1983 *Future Directions Inquiry* to realign its current construction program with projected demand growth, it had not fully considered options available past Mt Piper Power Station. In response to increasing concerns about these expansion plans, in 1986 Cox instigated an independent inquiry into electricity generation planning in NSW. The inquiry's primary aims were to recommend a plan for future NSW generation requirements, the appropriateness of the Electricity Commission's generation planning procedures and

---

[36] Interviewee B, Personal Communication, Interview or Questionnaire with author, 4 July 2011.
[37] *Proposed Power Developments on the Central Coast*, 4.
[38] Peter Cox (Minister for Energy and Water Resources), Letter to Don George (Vice Chancellor, University of Newcastle), 12 September 1984

"power station site reservation" processes.[39] The inquiry confirmed that the long-term growth in demand could well be below the three per cent forecast by the Commission. With a new power station not a political or economic option, the availability and production efficiencies of existing assets would be an important priority, as would the use of a mixture of alternate generation technologies.[40]

It is perhaps too easy to be critical of the Electricity Commission for acting on its 1980 forecast of six to eight per cent annual growth in demand. In 1980, the Electricity Commission would have been satisfied with their forward planning to meet the expected increases in demand in mid-decade. While the Commission may have been too reliant on past demand trends indicating future general growth, it could be argued that it was a victim of a number of factors outside its control. With construction and commissioning lead times for large power stations of six to eight years or longer juxtaposed with construction of aluminium smelters in half that time frame, the Electricity Commission nevertheless had to commit to its significant construction program well in advance of the start of smelter construction. With the cancellation of the Lochinvar smelter in April 1981, a slowing in the general demand for electricity, and the planning, construction and commissioning of Eraring and Bayswater (each 2,640 MW) well under way, the Electricity Commission could look to the mid-1980s, and for the foreseeable future, as a period of excess generating capacity. Mount Piper (1,320 MW), scheduled for the late 1980s, would only add to the overcapacity. What was initially envisaged to be an economic windfall for the state, became one in which the state, not the private sector, was in many respects the risk taker.[41]

The Electricity Commission's 1983 Annual Report nonetheless sums up its view on the issue of excess generation capacity: "failure to provide adequate supply would result

---

[39] *Report One: Planning, Economy, Flexibility Options Through the Mid 1980s.,* 5, 13, 287.
[40] *Report One: Planning, Economy, Flexibility Options Through the Mid 1980s.,* 11.
[41] Humphrey McQueen, *Gone tomorrow: Australia in the 80s* (London ; Sydney: Angus & Robertson, 1982). 50.

in a loss to the community of industrial production with a value far greater than the cost of the electricity not supplied."[42] This is perhaps the first official acknowledgment of the maxim of "no power is so dear as no power" that had guided the Electricity Commission's planning since the early 1950s.[43] Nevertheless, by the mid-1980s NSW had made a substantial investment in generating capacity in excess of that required for the forecast three per cent annual growth in demand.[44]

The Generation Planning Inquiry, politically and publically, ended what had been thirty-six years of seemingly unquestioned expansion of generation and transmission infrastructure. What once had appeared to be a hands off approach by government to the Electricity Commission's activities, had with this inquiry, clearly changed.

A further indication of the strain on relations between the government and the ECNSW over this issue took place on 23 March 1987 when Minister Cox advised the Electricity Commission Board that he intended to table the Generation Planning Inquiry's recommendations in Parliament the following day. [45] Tellingly, he also advised that he would not table the ECNSW's response, and that if the organisation chose to make its response public that it must make it clear that the response was on behalf of the Electricity Commission and not on behalf of the government.

While the inquiries of the early to mid-1980s heralded an end to seemingly unquestioned expansion, these were not the only setbacks experienced in what the organisation perceived as its primary role of electricity generation. Notwithstanding the Liddell generator failures, arguably the Commission's major infrastructure failure of the

---

[42] *Annual Report for the Year Ended 30th June 1983,* 45.
[43] Brady interviewed by Hamilton, October - November 1996.
[44] While there have been improvements in power station operations and efficiencies, greater power sharing between states, and the commissioning of many renewable generating projects, Eraring, Bayswater and Mt Piper (commissioned 1982-84, 1985-86 and 1992-93 respectively) were the last major base-load power stations to be commissioned in NSW.
[45] Electricity Commission of New South Wales, *Minutes of Board Meeting,* 21 March 1987, item 29317.

early to mid-1980s was its inability to gain approval to fuel Eraring Power Station with coal sourced from a to be developed adjacent open-cut mine.[46] At the time, Liddell, fuelled from open-cut mines, had the lowest coal costs per MWh Sent Out of all the ECNSW's thermal power stations. The cost of fuel advantages enjoyed by Liddell made it the preferred model for fuelling Eraring.

While the proposed Eraring mine was to be located within the shadow of the station, it was, however, only nine kilometres south-west of the major population centre of Toronto, and three to four kilometres from the village of Dora Creek and the township of Cooranbong. In contrast, the open-cut mines serving Liddell, while close to the villages of Ravensworth and Glennies Creek, were nevertheless between eighteen and twenty-five kilometres from the major population centres of Singleton and Muswellbrook. Concerned residents near Eraring had only to look at the detrimental consequences of Liddell's open-cut mines to be concerned about the Eraring development. In contrast to the fleeting ground level glimpses of the true visual impact of the Liddell open-cut mines, the public would easily be able to view the full extent of the visual impact of the Eraring mine from the vantage point of the easily accessible high elevation lookouts on the eastern side of the Watagan Mountains. Not surprisingly, community opposition to the proposed development was intense. The ECNSW eventually withdrew its proposal, in response to the NSW Department of Planning and Environment's objections of noise, dust, and water pollution, and the detrimental impact of blasting on the surrounding area.[47]

Finance – Bulk Supply Tariff

Central to the provision of electricity is the manner in which bulk consumers, such as county councils, are charged for electricity. The ECNSW employed a Bulk Supply Tariff mechanism that comprised two components. The first, a demand charge was based on a

---

[46] Costain Australia Limited: Electricity Commission of New South Wales, *Eraring Coal Project: Open Cut Mining Feasibility Study*, 1979, 1.
[47] Joseph Glascott, "Govt. Scraps Plans for Hunter Valley Coalmine", *Sydney Morning Herald*, 2 December 1980.

council's peak kilowatt consumption during the month. A higher demand charge was made for supply at or below 22 kV, and a lesser charge for supply at or above 33 kV. [48] The second part of the tariff, a base energy charge, was based on the KWhs consumed. This energy charge comprised a base rate and variable rate based on the cost of fuel and the basic wage. The BST was adjusted quarterly. In the period 1956 – 1964, for example, the energy charge declined on an annual basis. This was a reflection of the falling production costs as a consequence of the move to coalfield generation, technological improvements and the installation of larger capacity generating plant. Over the same period, the demand charge increased, reflecting the increased capital costs of large new plant.

In 1982, the ECNSW announced that the manner of the BST formulation was to be changed.[49] While the formula utilised to determine the demand charge would remain unchanged the base energy charge was to be subject to a loading of 12.5 per cent for consumption between 7 am and 10 pm on working weekdays. This loading was offset by a 12.5 per cent discount for consumption outside of these hours. Further, an additional twenty per cent loading was to be charged during the winter months. These time of day and seasonal variations were implemented to encourage distributors / retailers to develop their own tariffs that would promote the transfer of consumption from peak to off-peak periods.[50]

These increases were to a degree counterbalanced by the quarterly BST adjustments giving way to one annual variation and only after two months notice had been given. The 1982 increases in the demand charge reflected the higher levels of borrowing required to finance ongoing expansion of the system. The purchase of a number of gas turbine generators to replace the lost Liddell capacity was also identified as an unexpected

---

[48] *Annual Report for the Year Ended 30th June 1980,* 17.
[49] *Annual Report for the Year Ended 30th June 1982,* 33.
[50] *Annual Report for the Year Ended 30th June 1982,* 33.

expense. Higher interest rates, and the reduced level of capital works funding available from internal sources were also factors in the increased demand charge.

The Liddell generator failures also impacted the increased energy charges. These failures meant that coal from the upper Hunter had to be transported, at considerable cost, to Central Coast power stations required to operate at higher outputs. Replacement power from recommissioned older, less efficient power stations, increased fuel and other operating costs incurred were also reflected in the increased energy change. In 1992, the State Government established the Government Pricing Tribunal, later renamed the Independent Pricing and Regulatory Tribunal of New South Wales to provide independent oversight of the price levels charged by monopoly service providers.[51]

Finance - major capital works

Apart from the organisation's ability to internally fund part of its capital works program, the Commonwealth Government's Loan Council was the primary approval agency for borrowed funds required to develop electricity capital works.[52] The Loan Council's ongoing aim was to control the borrowings of both the Commonwealth and the states. While Loan Council rules and policies changed in the decades up to the early 1980s, the Commonwealth Government from the 1950s increasingly used the Loan Council to implement aspects of macroeconomic policy.[53] However, by the early 1980s, the Commonwealth Government's increasing reluctance to allow capital works to be financed via Loan Council approved borrowings, prompted the NSW Government and the ECNSW to explore alternative funding arrangements. [54] This second example of the

---

[51] "What Do We Do?," Independent Pricing and Regulatory Tribunal of New South Wales, http://www.archive.ipart.nsw.gov.au/. [Accessed 11 June 2010].
[52] Annual average of thirty-two per cent in the 1980s.
[53] "The Australian Loan Council," Department of the Parliamentary Library, http://www.aph.gov.au/binaries/library/pubs/rn/2001-02/02rn43.pdf. [Accessed 3 November 2012].
[54] *Report to the Treasury State of New South Wales Sydney, Australia*, (New York: Salomon Brothers, 1981). 6.

ECNSW's financial management demonstrates the innovative financial arrangements to fund capital works of the 1980s.

In May 1980, to meet the projected six to seven per cent per annum growth in demand, a number of NSW power station projects were either brought forward or created and combined into an Accelerated Electricity Development Program (AEDP). This capital works program was estimated to cost approximately eight billion dollars over ten years.[55] The AEDP comprised the commissioning of ten 660 MW generating units over three major projects: Eraring, Bayswater and Mt Piper. The planned completion date for the last of these projects (Mt Piper) was estimated to be February 1988. [56]

To finance the AEDP, the Electricity Commission envisaged utilising internal funds and the traditional source of financing – Federal Loan Council approved borrowings. Yet, the latter were becoming increasingly difficult to acquire as a consequence of Commonwealth Government policy changes. In response to these financing issues, the State Government engaged New York investment bankers, Solomon Brothers, to work with the NSW Treasury and the Electricity Commission to develop alternative financing approaches. Solomon Brothers' and the ECSNW's proposal encompassed the sale of Eraring Power Station to a private consortium of Australian banks and companies. The partners, including the Bank of New South Wales, Elders IXL, and the Australian and New Zealand Banking Group, contributed $203 million and borrowed the remainder of the $1.6 billion from international lenders.[57] This financial undertaking, often termed a leveraged leasing arrangement was, for taxation purposes, a transfer of Eraring from public to private ownership. The sale, however, was unusual in that the Electricity Commission had a majority of members on the Board of the new Eraring Power Company and consequently controlled all aspects of the station's management and

---

[55] "Report to the Treasury State of New South Wales Sydney, Australia," 7.
[56] "Report to the Treasury State of New South Wales Sydney, Australia," 8.
[57] Paul Landa (Minister for Energy and Water Resources), Letter to J.W. McBean (Assistant Secretary Labor Council of New South Wales), 2 April 1982

operations.[58] As the Partnership's Management Agent, the Electricity Commission provided all operational and maintenance requirements including fuel and labour. As the sole purchaser of the station's electrical output, the Commission was obliged to pay a price sufficient for the partners to earn an agreed after-tax return on their investment.[59]

For the Commonwealth Government, the complication of the "Eraring Deal", as the media began calling it, was the loss of taxation income of $250 million - $300 million.[60] The contentious aspect of this issue revolved around the banks and companies that made up the partnership being eligible for a Commonwealth investment allowance and a tax reduction on the depreciation of power station equipment. In addition, the consortium was eligible for tax deductions on the interest payments on its overseas borrowings. Within a week of the Eraring arrangements being announced in December 1981, the Commonwealth Government disallowed any similar 'Eraring style' financing arrangements.[61] In contrast, many in the media and the financial industry viewed the 'Eraring Deal' as unique and innovative.[62] The *Sydney Morning Herald* labelled it "the most sophisticated and innovative financial deal ever attempted by an Australian public utility."[63]

The Electricity Commission's senior management were no doubt pleased with the success of the arrangement, especially as the initial concept had originated in-house. However, as public servants these managers could be forgiven for a degree of frustration with the State Government and Premier Wran being lauded for the success of the

---

[58] Booth, *Warring tribes - The Story of Power Development in Australia*: 83-84.
[59] "Eraring Investors to Get 11.5pc After Tax", *Sydney Morning Herald*, 4 December 1981.
[60] Ross Gittins, "Elcom Shines at High Finance as the Lights Go Out", *Sydney Morning Herald*, 10 December 1981.
[61] The leverage leasing arrangement employed for the construction of Eraring Power Station is an early example of current widely used public private financing of public infrastructure construction.
[62] John Alexander, "Behind Wran's Power Play," *Australian Business*.
[63] Gittins, "Elcom Shines at High Finance as the Lights Go Out".

arrangement.[64] At least one senior manager viewed the situation as a further instance of public servants having the power to manage, being blamed for failure and not awarded the glory of success.[65]

The capital works debt incurred by the Electricity Commission and its predecessors illustrate that the provision of a vital service, despite the community often taking it for granted, is very expensive and that state and local governments, in the main, were the only authorities with access to the required financial resources. However, by the early 1980s, with the prospect of the government having to fund many billions of dollars of new electricity infrastructure, it is not surprising that the Wran Labor government was open to alternative avenues to finance Eraring. A few years later with overcapacity an issue, the government baulked at the Electricity Commission's ambitious development proposals post Mt Piper.

Aluminium smelters and electricity prices

The Electricity Commission, as has been noted, entered the decade with demand forecast to increase by between six per cent and eight per cent per annum. A substantial portion of this increase was associated with the anticipated accelerated industrial development, particularly the construction of two new aluminium smelters, and the expansion of a third, all in the Hunter Valley. To boost employment in the lower Hunter Valley, the NSW State Government actively supported all three projects by committing to a dramatic increase in the ECNSW's generation capacity. However, with the downturn in the world and Australian economies in the early 1980s, only one of the proposed smelters was constructed, and expansion plans for the third deferred. Immediate public debate revolved around three points of contention: the ECNSW's commitment to multiple base load power station construction that by mid-decade centred on the generation

---

[64] Alexander, "Behind Wran's Power Play."
[65] Interviewee L, Personal Communication, Interview or Questionnaire with author, 14 June 2011, 16 August 2012.

overcapacity; the actual price the smelters would pay for electricity; and lack of public transparency in negotiations between the smelters and the ECNSW.

The Environmental Impact Statements (EIS) for the new smelters at Tomago and Lochinvar were vague on the power demands that they would impose on NSW power supplies. The EIS for Tomago only noted that 370 MW of power would be required.[66] The Lochinvar EIS commented that in requiring 380 MW, which equated to an estimated seven per cent of NSW's electrical energy capacity, "the impact of the Lochinvar smelter on electrical power supply in New South Wales [would] be minor."[67] In reality, the impact of these developments on NSW's electricity generating capabilities was far from minor. The nature of aluminium production dictates that the power demand is continuous rather than the peaking demand profile of the system as a whole. In addition to the power required by the smelters, coupled with the poor operational availability of the existing steam power stations meant that two 660 MW generating units would be required in-service at all times just to supply the smelter load.[68] This is in addition to a third 660 MW generating unit required in-service to provide adequate "spinning reserve" to cater for system emergencies.[69] The commitment of this generating capacity to service the smelters highlights issues the NSW Government and the ECNSW had to contend with in the early years of the contracts. The most significant of these was the price the smelters would pay for electricity, and whether or not these were being subsidised by other consumers.

---

[66] New South Wales. Dept. of Environment and Planning., *Proposed Tomago Aluminium Smelter: environmental impact assessment* (Sydney: Govt. Printer, 1981). 6.

[67] Dames & Moore., Hunter Valley Aluminium Pty Ltd., and Alumax of Australia., *Lochinvar Aluminium Smelter : environmental impact statement* (Sydney: Hunter Valley Aluminium, 1980). 175.

[68] The Availability Factor for all ECNSW steam power stations in 1980 was a poor fifty per cent, and only improved as Eraring and Bayswater were commissioned.

[69] Spinning Reserve - ECNSW policy at that time was to 'cover' the largest generating unit in service by having sufficient generating capacity in service, but not fully loaded. Thus, if the largest generating unit were to be forced out of service, the lost generating capacity would be instantly available from the 'spinning reserve.'

The actual price the smelters would pay for electricity was not immediately forthcoming from the government, the Electricity Commission or the aluminium companies. After much public pressure, the prices were eventually made public in mid-1981 – 1.825 c/KWh for Tomago and 1.81 c/KWh for Lochinvar.[70] The difficulty in judging if these were fair prices is that the cost basis for their calculation was not published at the same time. The government, when questioned on this aspect, invariably replied that the price would be sufficient to cover the cost of production, transmission and a portion of the capital costs.[71]

By mid-1982, these assertions appear to contain an element of truth. As Eraring, and subsequently Bayswater, were envisioned to be the prime suppliers of electricity to the smelters, it is of note that Eraring in its first year of operation (1982) had a total production cost of 1.601 c/KWh Sent Out.[72] If an additional 5 per cent is added for the cost of transmission, the overall production costs equate to 1.68 c/KWh, 7 per cent below the sale price to the smelters.

Advantageous as these may have appeared for the ECNSW, the contentious issue was that these prices were not based on the BST that electricity retailers, and by inference industrial, commercial and residential consumers, were required to pay. For example in 1982, the BST was 3.234 c/KWh, 1.404 c/KWh, or seventy-six per cent above the price charged to the smelters.[73] As the demand element of the BST has a capital works cost component and the smelter price does not, in that context the smelters are the beneficiaries of substantial subsidies.

---

[70] J Pierce, "Disdavantage is not so Great", *Sydney Morning Herald*, Sydney Morning Herald, 21 April 1981. Dick, University of Newcastle (N.S.W.). Dept. of Economics., and University of Newcastle (N.S.W.). Institute of Industrial Economics., *Power subsidies to aluminium smelters in N.S.W*: 4.

[71] J. Tabakoff, "Smelter Subsidies Denied By Hills", *Sydney Morning Herald*, Sydney Morning Herald, 21 November 1980.

[72] *1986 Annual Review of Power Station Operations*: Power Division - Generation, 1986, 47.

[73] *Annual Report for the Year Ended 30th June 1982*, 32.

Howard Dick had identified this situation over twelve months earlier, before the first unit at Eraring was commissioned. Based on the data then available he estimated that the electricity consumers of NSW would be subsidising the smelters in the order of 1.0 c/KWh.[74] For this reason, he advocated that as the smelters were to make a constant demand on the system equivalent to two 660 MW units, they should, in addition to purchasing the required electricity, fund the construction of two 660 MW units.[75] The extent of the actual subsidy (1.404 c/KWh) only strengthened this call.

As to whether the NSW Government considered the smelters were being subsidised is dependent on the point of reference. The above data suggests that the smelters covered the cost of production and transmission of the electricity supplied to them. This does not extend to any substantial portion of the capital costs associated with the generating and transmission infrastructure used to supply that electricity. However, the government more than likely viewed this as the price it and the community had to absorb in order to attract the smelters, and the associated employment and other community benefits to NSW.

As only one of the two smelters was actually constructed, the level of the capital cost subsidy is even greater. In the absence of data on the price charged in later years, it is also difficult to establish if there was an escalation clause in the agreements that accounts for increases in the production costs of electricity. It is also difficult to determine if these early contracts, as did later contracts, have other features of the pricing structure. In 2009, Macquarie Generation, a successor of the ECNSW, and holder of some of the ECNSW's ongoing smelter contracts, revealed a $427 million loss attributable to a "fall in value of an electricity contract linked to the price of aluminium."[76]

---

[74] Dick, University of Newcastle (N.S.W.). Dept. of Economics., and University of Newcastle (N.S.W.). Institute of Industrial Economics., *Power subsidies to aluminium smelters in N.S.W*: 8.
[75] ———, *Power subsidies to aluminium smelters in N.S.W*: 8.
[76] Brian Robins, "Revealed: Our Biggest Power Generator's $400M Loss", *Sydney Morning Herald*, 3 November 2009.

While the prices charged by the ECNSW for the supply of electricity to the NSW aluminium smelters is clouded in a veil of "commercial-in-confidence" those charged by other states are somewhat more transparent. Hal Turton suggests that Comalco, the majority-owner of Queensland's Boyne Island smelter (established in 1982) was able to purchase Gladstone Power Station in 1994 at a very low price.[77] In effect this was a subsidy, if not in electricity prices, then in the form of a low cost power station to supply that electricity. As with NSW, the price charged by the SECV to Alcoa's Port Henry and Portland smelters was envisaged to cover production and transmission costs. A flexible component connected to the volatile world price of aluminium was included to provide the SECV with a small rate of return. Echoing Howard Dick's 1981 comments, former Victorian Treasurer Allan Stockdale, in 1995 is reported to have commented that the Victorian subsidies were 'unfairly benefit[ing] [the aluminium smelter] at the expense of other business and household taxpayers in Victoria."[78]

"The common thread in the industry is secrecy."[79]

The lack of transparency of the smelter negotiations and the increased political and public scrutiny during the 1980s highlights aspects of the organisation's style of management. Public comment on the organisation's management style was often less than positive. Nowhere was this more evident than in the selection and manner of the release of information into the public arena on electricity prices to the aluminium smelters. Four examples illustrate the tenor of public comment on this issue. Ross Gittins, the *Sydney Morning Herald's* economics editor, commented at the height of the 1981 power

---

[77] Hal Turton, "The Aluminium Smelting Industry: Structure, market power, subsidies and greenhouse gas emissions " The Australia Institute, http://www.tai.org.au/documents/dp_fulltext/DP44.pdf. [Accessed 6 September 2014], 12.
[78] A. Stockdale, "State withdraws from negotiations with Alcoa," Press Release, 18 July 1995. quoted in Turton, "The Aluminium Smelting Industry: Structure, market power, subsidies and greenhouse gas emissions " [Accessed 6 September 2014].
[79] Dick, University of Newcastle (N.S.W.). Dept. of Economics., and University of Newcastle (N.S.W.). Institute of Industrial Economics., *Power subsidies to aluminium smelters in N.S.W*: 24.

restrictions, that the Commission was "pathologically secretive."[80] Howard Dick, also commenting in 1981 on the alleged power subsidies to aluminium smelters made the observation, that "the common thread in almost any discussion of the power industry in NSW is secrecy."[81] Even G.J. McDonell, the Chairperson of the 1986 *Commission of Inquiry into Electricity Generation Planning in NSW* suggested the public's access to industry information, needed to be "considerably enhanced."[82] In 2004 he further commented that the Electricity Commission had been a "highly visible, politically powerful, but unaccountable" public organisation.[83] From these comments the Electricity Commission, despite its overall technical and engineering excellence, was being accused of a lack of administrative transparency.

An absence of administrative transparency - or its harsher variant, secrecy - involves governments, or government departments withholding or restricting access to information until the holder of the information chooses to make it public.[84] This definition tends to imply that these actions are deliberate in nature. Steven Aftergood softens the accusation slightly to suggest that the withholding of information may, in some instances, be an unconscious act.[85] Nevertheless, the outcome is identical – the public is denied access to information. However, it is not suggested that the ECNSW was alone in these practices. John Tosh suggests that all governments depend on a degree of confidentiality in their

---

[80] Gittins, "All-Electric Home is the Real Blackout Culprit".
[81] Dick, University of Newcastle (N.S.W.). Dept. of Economics., and University of Newcastle (N.S.W.). Institute of Industrial Economics., *Power subsidies to aluminium smelters in N.S.W*: 24.
[82] *Report One: Planning, Economy, Flexibility Options Through the Mid 1980s.,* 10.
[83] McDonell, "N.S.W. Government Ownership and Risk Management in a Mandatory Pool - 'Neither Fish nor Fowl nor ...'" 79.
[84] Francis E. Rourke, "Administrative Secrecy: A Comparative Perspective," *Public Administration Review* 35, no. 1 (1975): 1. Donald C. Rowat, "The Problem of Administrative Secrecy," *International Review of Administrative Sciences* 32, no. 2 (1966): 99.
[85] Steven Aftergood, "Openness and Secrecy: The Pendulum Swings," http://www.fas.org/faspir/v53n1.htm. [Accessed 16 December 2014].

actions.[86] Public servants, for example, would in many instances, be reluctant to record official recommendations and decisions if they were not assured that these would not be in the public domain in the near future.

In his 1977 *Review of New South Wales Government Administration,* Peter Wilenski noted that statutory authorities, such as the ECNSW, while "performing their primary function successfully," often lacked external reviews of their operations.[87] Annual Reports do not serve this purpose as they are the organisation's own view of its operations. As a statutory authority, the ECNSW was for many years also not subject to review by the NSW Public Service Board. Nor were they subject to many of the "legal provisions applying to private companies."[88] Under these circumstances it is perhaps not surprising that the ECNSW was, in many respects, inwardly focused and remote from community accountability. McDonell's 2004 comment that the ECNSW had been a "remote, politically powerful but unaccountable public agency", while essentially accurate nevertheless can be tempered by it more than likely being a function of the organisation's history and the nature of its legislative structure.[89]

One of the earliest forms of the operational withholding of information relates to the manner in which the Bulk Supply Tariff (BST) was calculated. The BST was a two-part tariff comprising a charge for the quantity of electricity consumed, and a charge related to the peak demand during the period. Despite numerous requests from electricity distributors, the ECNSW consistently refused to make public the method of calculation for the peak demand charge.

---

[86] John Tosh, *The pursuit of history : aims, methods, and new directions in the study of modern history*, 5th ed. (New York: Pearson Longman, 2010). 112.
[87] Wilenski, *Directions for change: an interim report*: 60.
[88] ———, *Directions for change: an interim report*: 60.
[89] McDonell, "N.S.W. Government Ownership and Risk Management in a Mandatory Pool - 'Neither Fish nor Fowl nor ...'" 79.

An apparent aversion to administrative transparency was not restricted to the ECNSW's external negotiations. Internally there appears to have been reluctance on occasions to communicate fully and openly with employees. This was evident, for example, in an initial reluctance in 1988 to consult power station maintenance employees on the formulation of rosters they would be required to work upon the introduction of shift work maintenance. The lack of consultations with employees inevitably resulted in industrial action. A further example, perhaps illustrating the nature of ECNSW to government consultation, relates to power restrictions caused by the Liddell failures during June 1981. Commenting on the lack of warning of blackouts, the *Sydney Morning Herald* concluded that while the ECNSW would have been fully aware of the state of its generation capabilities during the period of the Liddell failures, it did not inform the government of the seriousness of the situation in a timely manner.[90] A senior ECNSW manager intimately involved with system operation at the time suggests, however, that it took ECNSW senior management many hours to convince the responsible minister of the need for major load shedding to prevent the loss of generation capacity at the Snowy where critical head ponds were almost depleted.[91] Subsequent days saw the introduction of gazetted power restriction. Such an explanation, at least in this instance, would suggest that it is debatable to infer that "arrogant secrecy, so often the hallmark of incompetence", can be applied to the ECNSW.[92]

The second form of administrative secrecy practised by the ECNSW and its successor, Pacific Power, relates to two issues associated with archived documentation. The first relates to those documents transferred to the State Records Authority of NSW prior to the organisation's dissolution in 2003. These comprise two groupings of documents. The first are those with either an open or early access direction, and comprise non-sensitive documentation such as operating manuals, photographs and other material that have been

---

[90] "Not Just Mr. Hills", *Sydney Morning Herald*, 18 June 1981.
[91] Interviewee I, Personal Communication, Interview or Questionnaire with author, 21 January 2014.
[92] "Not Just Mr. Hills".

classified as being of heritage value. The second group, with a fifty-year Closed for Public Access direction, comprises the ECNSW and Pacific Power Board Minutes. The stated reason for this restriction is that the documents contain "sensitive personal information."[93] A review of the Board Minutes (1950 to 1959) held by the State Records Authority of New South Wales indicates that they are principally a record of decisions made at meetings. There is little if any detail as to why certain decisions were made or the views expressed by those present at the meetings. Further, there would appear to be no information that could be classed as of a sensitive personal nature in these early documents. This conclusion is confirmed by a review of a second set of Board Minutes (1950 – 1991) not currently held by State Records and not subject to the same access restrictions.[94]

At issue is not that a second set of minutes currently do not have restrictions, rather why Pacific Power requested State Records apply restrictions to the first set. While it is acknowledged such a classification may appear to be justified in certain circumstances, a review of a listing of documents with access restrictions held by State Records indicates that the ECNSW / Pacific Power were not alone in classing material as containing sensitive personal information. Of the multitude of records listed on the State Records website in late 2009, 1134 were covered by some form of access direction.[95] Of these, 536 are Closed for Public Access; 166 cite non-personal restrictions such as security or safety and 370 cite a restriction based on the record containing or likely to contain personal information. The duration of the restrictions varies widely, with forty-seven per cent at 100 years or longer and thirty-eight per cent having a fifty-year restriction. In many of these instances, including Pacific Power documentation held by State Records, it

---

[93] State Records Authority of New South Wales, "Pacific Power - Access Direction # 347," http://www.records.nsw.gov.au/archives/pacific_power_3034.asp. [Accessed 7 July 2008].
[94] This second set of Board Minutes is currently located at Eraring Power Station.
[95] Pacific Power Access Directions # 347 and #348.

is difficult not to conclude, as did Nye in his research into the GE Corporation that the "historian [often] confronts an institution bent on controlling the past."[96]

The second issue associated with archival documentation relates to the fate of the bulk of the documentation that this organisation would have generated and accumulated during its fifty-two years. In addition to material transferred to State Records, the ECNSW / Pacific Power's successors, Macquarie Generation, Delta Electricity, and TransGrid, received documentation pertaining to each respective organisation. Eraring Energy, in addition to receiving similar documentation also received documentation pertaining to the ECNSW / Pacific Power as a whole. These included documentation associated with Worker's Compensation, dust disease claims and the organisation's collection of photographic images. In the closing months of Pacific Power's existence, significant quantities of the organisation's documentation were also transferred to the Residual Business Management Corporation (RBMC), a NSW statutory corporation established in 2003 to manage Electricity Commission and Pacific Power residual business.[97] Approaches made to this organisation for access to the ECNSW/Pacific documentation have proven unsuccessful.[98] The implications for research into the ECNSW/ Pacific Power is that researchers have to rely on what was released at the time, media reporting, and what little may subsequently become available through memoirs, diaries, oral histories or uncontrolled collections of official documentation.[99]

---

[96] David E. Nye, *Image Worlds: Corporate Identities at General Electric, 1890-1930* (Cambridge, Mass.: MIT Press, 1985). 3.
[97] Subsequent to requests to the RBMC for access to ECNSW / Pacific Power documentation have been unsuccessful.
[98] Mark Guest (Corporate Secretary, Residual Business Management Corporation), Letter to Kenneth Thornton January - December 2009.
[99] Tosh, *The pursuit of history : aims, methods, and new directions in the study of modern history*: 113.

The 1980s were a golden decade of technical innovation

Technically, ECNSW-designed power stations from Vales Point A, through Munmorah, Liddell, Wallerawang C and Vales Point B, were generally of similar boiler / turbine / generator configuration.[100] With the exception of the Liddell failures, however, the 1980s and early 1990s, were a second 'golden' era of technical and operational development. A total of 6,600 MW of capacity in ten generating units at three power stations were commissioned. Eraring (figure 6.2), Bayswater (Figure 6.3) and Mt Piper, while utilising a similar technical configuration to previous stations, incorporated a number of major engineering innovations. These included front and rear boiler wall firing; natural circulation boilers, fabric filter dust collection, high and low pressure turbine bypass systems and full scope replica power plant training simulators. The compression of the final commissioning program for each generating unit from seventeen to twelve weeks is largely attributable to the use of the turbine bypass systems and operating staff undertaking simulator training prior to commissioning.[101]

Figure 6.1 Eraring – May 1984 (ECNSW CT7.0003)

[100] Single reheat water-tube pulverised fuel fired boiler supplying steam to a single high pressure, intermediate pressure, double low pressure cylinder steam turbine driving a single hydrogen cooled generator.

[101] *Annual Report for the Year Ended 30th June 1983*, 21.

Figure 6.2 Bayswater - September 1987 (ECNSW CN82.0141)

Conclusion

The bubble burst on the ECNSW's three golden decades in the third week of November 1981. In that week, two of Liddell Power Station's four 500 MW generators failed in identical circumstances. A third 500 MW generator had failed in similar circumstances earlier in the year. Despite this earlier generator failing for a second time, three hours after it was placed back into service in June 1981, its failure while significant, was no different to the failure of any single large generating unit from other causes and one that would be resolved by established practices. However, the failure of the two further generators in November heralded a decade for the Electricity Commission in which an optimistic future transformed to a reality that included power restrictions, excess generation capacity, political and public scrutiny, and an end to three decades of reliability of supply being seemingly the sole organisational performance benchmark.

Moreover, the period 1980 – 1988 was one of contrasts. The decade commenced with strong momentum in electricity sales based on solid residential and industrial demand bolstered by the prospect of even higher demand from new aluminium smelters to be constructed in the Hunter Valley. Early in the decade, negotiations with the smelter companies had progressed to such an extent that to have the first of the required generating capacity available by mid-decade the Electricity Commission had to complete or be constructing three new large base load power stations. However, the optimism generated by the prospect of increasing electricity sales was based on flawed assumptions.

It was assumed that electricity sales would continue to increase at high single digit annual rates. They did not. As high as the annual increase in sales was in 1980, when the contracts for the new generation capacity were entered into, the long-term trend of the annual increases was declining not increasing. Despite a one-off surge of 10.5 per cent in 1985, the annual increase in demand averaged five per cent over the decade and had declined to 3.1 per cent by 1989.[102]

The second flawed assumption was that the international economic conditions that prompted the aluminium smelters to consider NSW would continue. They did not. The susceptibility of aluminium prices to a downturn in world economic activity proved fatal for one smelter, the expansion of a second, and the Electricity Commission's plans to expand its production capacity.[103] That is, the Lochinvar smelter was abandoned. Kurri Kurri's expansion plans deferred, and the Electricity Commission's expansion plans were thrown into confusion. The first of four generating units at Eraring was about to be commissioned, construction of the four Bayswater units was progressing, and Mt Piper was in the early planning stages. A commitment had been entered into to provide over 6,000 MW of new capacity that in the near future would be well in excess of requirements. It would be easy to be critical of the Electricity Commission for allowing the capacity of the system to be significantly in excess of requirements. However, the organisation was a victim of the difference in construction lead times between aluminium smelters and large base load power stations. Ironically, this was at a time when NSW was in the throes of the critical, but temporary, Liddell failures and the consequential power restrictions, yet the Electricity Commission was facing the prospect of long-term excess generation capacity.

The failure of the three Liddell generators in 1981 contrasts with the technical successes of the construction, and commissioning of the 2,640 MW stations at Eraring and Bayswater and, in the early 1990s, the 1,320 MW Mt Piper. In the first instance, the

---

[102] *Annual Reports of the Electricity Commission of New South Wales / Pacific Power.*
[103] "Lochinvar Blow".

Electricity Commission considered poor design of the Liddell's EE generators as the root cause of the failures. The redeeming feature for the organisation, apart from the Ombudsman's finding of an inadequate generator inspection program, was that the failures were not of its design. In the second, the accelerated commissioning programs at Eraring Bayswater and Mt Piper were due largely to the innovative turbine steam bypass system, the ability to attain full load quickly, high availability, and barely visible particulate and gaseous emissions at full load.[104]

While the contrasts noted above were concrete, the Electricity Commission's expansion plans for a post Mt Piper future did not eventuate. The contrast revolved around the differing opinions on how to achieve a reliable supply in the future. Even with a reduced forecast of three per cent annual growth, the Electricity Commission proposed to commission 660 MW of new capacity each year from 1994 to 2002. Unlike the seemingly unquestioned expansion of previous decades, the State Government, in light of the reality of overcapacity and the prospect of heavy capital costs, questioned the Electricity Commission's plans. Likewise, the Central Coast community identified to accommodate the first of the post Mt Piper power stations, taking strength from community opposition to the Eraring open-cut mine, strongly opposed the Electricity Commission's proposals. Ultimately, the differing opinions on how to provide a reliable electricity supply, in many respects, focused on differing interpretations of the maxim 'no power is so dear as no power."[105] On the one hand, past experiences guided Electricity Commission senior management to provide a reliable supply, through new construction. The State Government, via the McDonell inquiry, questioned the basic premise of such a policy and blocked the Electricity Commission's post Mt Piper plans. Eventually, a reliable and secure supply was achieved, not through construction of new production capacity, rather through improved management of existing assets.

---

[104] *Annual Report for the Year Ended 30th June 1983,* 15.
[105] Brady interviewed by Hamilton, October - November 1996.

Chapter 7 Commercialisation of a Public Electricity Authority[1] (1988 – 1994)

Introduction

The period between the late 1980s and mid-1990s, while not as traumatic as the early to mid-1980s, nevertheless was a period in which an internally focused engineering organisation was transformed into an organisation with a dual internal and external commercial outlook. The election of the Nick Greiner Coalition government in March 1988 heralded a series of micro-economic reforms in the operations of NSW Government Trading Enterprises (GTEs). For the Electricity Commission, the focus of these reforms centred on the $6 billion debt the Commission had accrued as a consequence of its generation expansion program during the 1980s, the efficiency of its bureaucratic organisation structure, and the efficiency with which it produced electricity.[2] To resolve these essentially internal issues, major administrative and cultural reforms were implemented in the seven years 1987-1994.

The focus of this chapter is the implementation and impact of aspects of structural, cultural and business changes on the Electricity Commission in the late 1980s and early 1990s. These events, while eventful and challenging for senior management and many employees, were in parallel to the Electricity Commission's response to the initial development of the NEM. These in turn were a precursor to the breakup and eventual demise of the organisation in the latter half of the decade. Accordingly, these seven years are characterised by two separate but intertwined fields of activity. The first, the focus of this chapter, encompasses the internal structural, cultural and operational reforms implemented to improve the efficiency of the organisation's activities. The second area of

---

[1] Chapter title adapted from Ross Bunyon, "Commercialisation of Public Electricity Authorities" (paper presented at the Power Generation in the 90's Conference, Sydney, 7/8 October 1990), 1.
[2] External debt at 30th June 1989 was $B6.011 on a base of $B6.855 fixed assets. Total debt to total assets ratio is 0.877. *Annual Report for the Year Ended 30th June 1989*: 1989, 13, 38.

activity and the focus of the next chapter encompasses the State Government's response to the development of the NEM, and the effect these had on the Electricity Commission.

As a central premise of this study relates to the rise of centralised coordination in the NSW industry, it is appropriate that a supplementary theme in this chapter reviews the similarities and differences in like industries in similar interstate and international jurisdictions. To this end the generation and transmission industries in Victoria, New Zealand and England and Wales are examined.

Industry structure

Notwithstanding the power restrictions and the political and public scrutiny of the early to mid-1980s, the operational control of the NSW system into the 1990s continued as a coordinated regional system (Figure 7.1) that had been implemented with the formation of the Electricity Commission in May 1950. Throughout this period (1988–1994) the Electricity Commission retained its near monopoly on the generation and HV transmission of bulk electricity through a centrally coordinated regional interconnected grid.

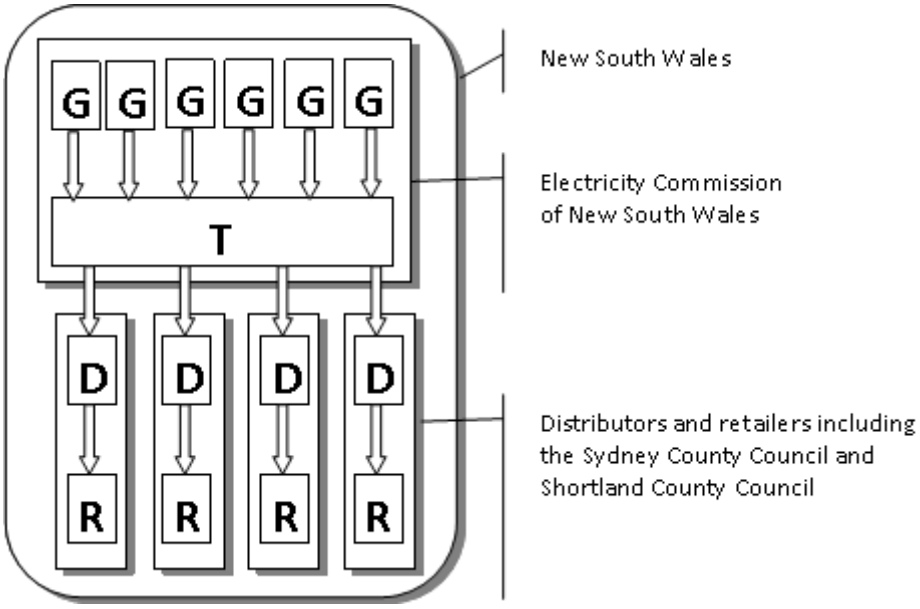

Figure 7.1 Basic configuration of the NSW electricity supply industry 1988 – 1994

Commercialisation: a focus on efficiency and results

The postwar application of Keynesian economic policies had been instrumental in providing the conditions for high economic growth rates, high wages, low inflation and general prosperity.[3] By the 1970s, a number of economic crises, including the October 1973 oil crisis, had slowed the postwar 'golden years' of growth and prosperity. Linked to these events was a growing belief that government activity in many industry sectors was characterised by waste and inefficiencies and that the supply of commodities and services were best provided by a market-based private sector. Many governments believed that only through policies that favoured free trade, free markets, competition, and the efficiency of the production process, could national economies survive, if not prosper, in an increasingly globalised economy. To achieve these goals, the most common policy approaches included managerialism, corporatisation, privatisation and contracting out activities.[4]

Each of these policies, when implemented in government departments or enterprises, had aspects that endeavoured to introduce private sector business practices. Among these, manageralism was based on the premise that public sector managers were employed to manage the business and should not be hindered by excessive political interference. The focus was on the delegation of responsibility and the importance of results and output over inputs and excessive adherence to rules and procedures. Corporatisation was based on the introduction of commercial business principles into public administration. When implemented in GTEs, corporatisation often involved a legislative change such that the enterprise acquired increased autonomy while remaining in government ownership. In many instances, corporatisation was a precursor to privatisation of GTEs. Finally, outsourcing, or contracting out involved specific activities in public sector organisation

---

[3] Steger and Roy, *Neoliberalism*: 7.

[4] Rodney Smith, Ariadne Vromen, and Ian Cook, "Keywords in Australian Politics," Cambridge University Press, http://0-www.newcastle.eblib.com.library.newcastle.edu.au/EBLWeb/patron?target=patron&extendedid=P_268202_0. [Accessed 29 August 2011].

being performed by a private provider. Examples of outsourcing included information technology services, aspects of human resource management, services to the public and the provision of infrastructure. Each was based on the basic premise that public administration activities were generally set in a traditional bureaucratic mindset of wastefulness, inflexibility and inefficiency.

In Australia, economic policies such as managerialism, corporatisation and privatisation were often grouped under the banner of economic rationalism. Beginning in the mid-1980s, many were implemented as part of the Hawke-Keating Labor government's micro-economic reform of a number of key industry sectors including financial markets, airlines, land transport, telecommunications, the labour market and electricity.

Inquiries are often the catalyst for further change.

The 1983 *Performance and Future Direction Inquiry* and the 1986 *Inquiry into Electricity Generation Planning in NSW* marked the end of the early and middle years of the Electricity Commission. The organisation's latter years were set in an environment characterised by the economic rationalist theory and policies that were the outcome of two inquiries in the late 1980s. These were the Commission of Audit's 1988 *Focus on Reform* inquiry into the State's finances and the 1987 Public Accounts Committee's examination of the Commission's management of the *Ravensworth Coal Washery* project.

The Commission of Audit's examination of the State's finances initiated in 1988 by the newly elected Greiner Coalition government had two prime objectives. First, to conduct a wide ranging review of the state's financial accounts and, second, to report on the financial structure of several state GTEs. The *Sydney Morning Herald* summed up the origins of this inquiry by noting the new government's concerns with the state's four billion dollars of unfunded insurance liabilities, and the substantial losses being incurred

by a number of public trading authorities.[5] The Electricity Commission, for example, while delivering a $160 million dividend to the government in 1990, nevertheless had a six billion dollar debt as a result of its power station construction program. In many respects, it is not surprising that the inquiry concluded that NSW was spending more than it earned.[6]

Of direct relevance to the Electricity Commission, the inquiry concluded that public ownership of commercial businesses, many of which were considered to be non-core, inhibited the pursuit of the commercial objectives and efficiencies that exposure to market forces would produce. Ministerial interference in pricing policies, community service obligations, and poor industrial relations were also highlighted as harmful to the efficient commercial operation of the statutory authorities.[7] It was, however, economic rationalist concepts that were at the heart of the inquiry's recommendations for a number of the state's GTEs. The introduction of private sector, market-based, business practices, such as commercialisation and corporatisation were viewed as preparation for eventual privatisation. Full exposure to commercial competition would, it was believed, lead to further improvements in efficiencies and greater responsiveness to the needs of customers.[8]

For the ECNSW, the inquiry's recommendations related to several key areas including excessive investment in power station capacity and the subsequent high levels of debt.[9] Also highlighted was the ECNSW's power station availability, which was the lowest of any major Australian electricity generating authority; restrictive employee work practices;

---

[5] "Mr. Greiner's Bare Cupboard", *Sydney Morning Herald*, 23 April 1988.
[6] Commission of Audit., *Focus on Reform: Report on the State's Finances*, vol. Executive Summary: v.
[7] ———, Inquiries, Special Reports *Focus on Reform 2: Report on the State's Finances*, vol. 2 (Sydney: New South Wales, Commission of Audit, 1988). 14-15.
[8] E Groom, "The Curran Report and the role of the state," *Australian Journal of Public Administration* 49, no. 2 (1990): 150-52.
[9] Commission of Audit., *Focus on Reform 2: Report on the State's Finances*, vol. 2: Appendix A-1, 1-3.

high rates of sick leave; absenteeism; excess staff numbers, and low labour productivity.[10] Finally, the inquiry noted the Commission's electricity pricing policy did not reflect the true cost of production or the high coal costs from its own coalmines.

The inquiry's comments on generation overcapacity are a repeat of previous inquiries in 1983 and 1986, updated for the passage of time. In the winter of 1987, the inquiry noted the ECNSW's generating reserves, made up of installed generating capacity plus NSW's Snowy allocation, exceeded the peak demand by seventy-three per cent.[11] This compared unfavourably with the Queensland Electricity Commission's reserve of thirty-eight per cent at that time. Further, the ECNSW's low power station reliability and availability compared unfavourably with the power stations in both Queensland and Victoria.[12] The inquiry attributed the poor extent of both of these features to technical and work practice inefficiencies in Electricity Commission power stations. In a damning comment the inquiry commented that the organisation more than likely increased its generation capacity, in part to compensate for inefficient maintenance practices at its power stations.[13] Not surprisingly, improvements in power station reliability and availability, headed the list of fourteen critical areas requiring attention. Other critical areas included labour flexibility, wage and salary structures, and a reduction in staff numbers and overheads. In an era of economic rationalism, it is perhaps not surprising that the inquiry concluded that the electricity generation, distribution and retail sectors could be better carried out by the private sector.

The inquiry noted that if GTEs were to operate on a commercial basis, Board members should have commercial experience in running a business.[14] Not until the appointment of

---

[10] Power station availability is the ratio of amount of time a station is available for production in time period to the total time in that period.
[11] Commission of Audit., *Focus on Reform 2: Report on the State's Finances*, vol. 2., 1. If NSW's Snowy allocation is not included in this calculation, the ECNSW's overcapacity is thirty-seven per cent.
[12] ———, *Focus on Reform 2: Report on the State's Finances*, vol. 2: Appendix A-1, 2.
[13] ———, *Focus on Reform 2: Report on the State's Finances*, vol. 2: Appendic A-1, 2.
[14] ———, *Focus on Reform 2: Report on the State's Finances*, vol. 2: 84.

John Conde as Chairman in May 1988 did an Electricity Commission Chairman have extensive commercial experience in the private sector. In thirty-seven years to 1987, all of the Commission's Chairmen either had an engineering background or were career public servants. While H.G. Conde, the Commission's first Chairman, had been recruited from private industry (the Electric Light and Power Company), he was nevertheless an electrical engineer by profession. The career of Frank Brady, Vice-Chairman, Chairman then General Manager (1975-1988), typifies the rise of an engineer to senior management. Brady joined the SCC as a junior engineer in 1949 and transferred to the newly formed Electricity Commission in 1951. Following a brief period as Efficiency Engineer at Balmain Power Station, he was appointed Engineering Assistant to the Electricity Commission's Chief Engineer in 1959. From 1961 until his appointment as Vice-Chairman in 1975, and Chairman in 1978, Brady held a succession of senior management positions including Engineer/Management, Assistant Manager and Manager/Secretary. His commitment to the expansion of the organisation's generating capacity was, in many respects, a purely engineering solution to supplying the seemingly never ending rise in demand. As has been noted previously, this commitment stemmed, in part, from his experiences during the postwar power crisis, and a belief that the cost to the community of a lack of sufficient electricity exceeded any savings achieved by not investing in new capacity.[15] A measure of his commitment to an engineering solution to the Commission's problems was evident in his retirement letter to employees in November 1987. While acknowledging the challenges facing the Commission, he hoped that the organisation would remain free to continue to resolve future challenges as they had in the early days of the organisation.[16]

The second inquiry of the late 1980s to have an impact was the Public Account Committee's examination of the Electricity Commission's management of the

---

[15] Brady interviewed by Hamilton, October - November 1996. Brady attributes this dictum to Dr Homi J Bhaha, the first Chairman of the Atomic Energy Commission of India.

[16] _____, "Frankly speaking", *Network*, Electricity Commission of New South Wales, November 1987.

construction and commissioning of the $70 million Ravensworth Coal Washery in the upper Hunter Valley.[17] Proposed in 1981, the Washery's initial role was to supply washed coal to the Central Coast power stations as part of the Electricity Commission's response to the anticipated expansion in aluminium smelting capability in the Hunter Valley. [18] With the cancellation of the Alumax Lochinvar aluminium smelter project, the downturn in the economy, and the subsequent slowing in electricity demand, the initial reason for the Washery was removed. The project, however, was considered viable if it were to be used to supply washed coal to Liddell and Bayswater Power Stations. Improved coal quality would, it was hoped, ultimately result in improved reliability of the Liddell boilers and thus contribute to the Electricity Commission's overall goal of reducing the Reserve Plant Margin. The Washery's commissioning program was, however, plagued with engineering and industrial relations problems.

With the Washery's commissioning delays as a primary focus, the inquiry noted that many of the project's delays were indicative of a management culture that was locked into past practices, and one that did not possess the flexibility to recognise, let alone quickly respond, to changing circumstances. The outcome of the *Ravensworth Inquiry*, in many respects critical of Electricity Commission management, by itself may not have initiated the dramatic administrative reforms that were to follow. Nevertheless, viewed in conjunction with the *Focus on Reform Inquiry*, they precipitated a turn away from the Commission's traditional engineering focused structure to a flatter management structure with an increased commercial outlook.

Many of the issues highlighted in these two inquiries, and at the core of the subsequent internal administrative and cultural reforms, had been highlighted a decade earlier by Peter Wilenski in his review of the NSW Government Administration. Primary among these was the nature of organisations such as the ECNSW. These were seen as

---

[17] Public Accounts Committee: *Report No. 37 of the Public Accounts Committee entitled "Ravensworth Coal Washery."*, 1987, iii.
[18] *Report No. 37 of the Public Accounts Committee entitled "Ravensworth Coal Washery.",* 12.

bureaucratic organisations that specialised in a limited number of activities, had hierarchical authority structures, and were governed by multiple systems of rules, or Standing Instructions.[19] Further, he suggests that these bureaucratic organisations operated at their best in a stable and known environment. For thirty years, the ECNSW found stability in rising demand and power station construction. In the 1980s, it became clear that the ECNSW was operating in an environment that required a greater degree of flexibility. The Liddell generator problems and the subsequent power restrictions and blackouts, rising production costs, a slowing demand, were departures from the steady-state, predictability of increasing demand and power station construction. The organisation problems highlighted by these departures included a hierarchical management structure with a concentration of authority at executive and senior management levels, poor delegation of responsibilities, communication problems with employees and issues with the coordination of organisation wide activities.[20]

Perhaps an obvious question is why these organisational issues identified by Wilenski, were not addressed in the late 1970s. Admittedly, the creation of the position of General Manager in 1981 to manage day-to-day activities addressed some of the issues highlighted by Wilenski. Nevertheless, wider ranging organisational changes were limited in their extent. Any changes would have necessitated major disruptions to the organisation which was in the early stages of a major power station expansion program. In other words, the imperative to change was not recognised, not dictated by government, or deliberately not acted on. Why then were similar initiatives implemented in the late 1980s and early 1990s? The power station design program had essentially been completed, and the twelve 660 MW generating units construction program, which had commenced in 1978/1979, would be soon be completed. Further, there was little prospect of further design or construction projects. To many senior managers it was evident that the mode of organisational business needed to change from expansion to one of the

---

[19] Wilenski, *Directions for change: an interim report*: 149-50.
[20] ———, *Directions for change: an interim report*: 164.

maintenance of assets. Equally, external scrutiny focused on the organisation's cost management processes as well as the efficient operation of all aspects of the business. In other words, the imperative for change was evident in the late 1980s and early 1990s where it had not been a decade previously.

Elcom in the 90s: a break with the past

The Commission's responses to the *Ravensworth Inquiry* and later confirmed by the findings of the *Focus on Reform Inquiry* were implemented in 1988 by Chairman John Conde and newly appointed General Manager Barry Flanagan. "*Elcom in the 90s*," Flanagan's title for the administrative reform initiative, targeted the organisation's structure and processes.[21] In an open letter to Commission employees in February 1988, Flanagan noted that the organisation's structure and many of its procedures were not appropriate for the current business environment.[22] The Commission, he believed, had to be structured to best meet the challenges of a changing social and commercial environment.[23] In essence, it was an organisation with a strong engineering and electricity generation culture, and a weak business focus.

The structural and cultural changes initiated by Flanagan's "Elcom in the 90s" belie a much more complex rationale. While *Ravensworth* highlighted a number of engineering and managerial issues, in all probability these could have been resolved by normal executive action and not required major dramatic organisational change. In many respects, they do not, in themselves, lead to Flanagan's comment that the organisation's management structure had to be appropriate to cater to the business environment.[24] The origins of the dramatic and decisive organisational and cultural change of the late 1980s and early 1990s originated, in the main, from factors external to the Commission. These

---

[21] Barry Flanagan, "An Open Letter to all Commission Employees - 15 April 1988", *Network*, Electricity Commission of New South Wales, April 1988.
[22] ———, "An Open Letter to all Commission Employees - 23 February, 1988", *Network*, Electricity Commission of New South Wales, February 1988.
[23] ———, "An Open Letter to all Commission Employees - 23 February, 1988".
[24] ———, "An Open Letter to all Commission Employees - 23 February, 1988".

included the factors of commercialisation, competition and ownership, embodied in the *Focus of Reform* Inquiry.

While the Commission's executive would have been aware of the micro-economic reforms being implemented in other industries, it is not surprising that, by the late 1980s, the executive concluded the business environment in which the Commission operated had changed significantly. Future events, they concluded, were no longer solely dictated by past events and trends.[25] A different business model was required – one that managed the business as well as the technology – one that had greater responsiveness and flexibility.[26]

In a broader context, economic rationalist values such as strategic planning, target setting and a focus on outputs were evident in management's revised focus on the business and employees, rather than technology and resource inputs.[27] Between 1988 and 1992 there were several organisational restructures and managers increasingly being held accountable for results. There was also growing acknowledgment that employee relations, and other administrative functions, were important in supporting operations and maintenance.[28] It should be noted that many of these recommendations had been highlighted five years earlier in the 1983 report on *Performance and Future Direction*.

With the release of General Manager Barry Flanagan's open letters to staff in February and April 1988, few outside of senior management would have grasped the extent of the organisational and cultural changes the Electricity Commission was about to undergo. Employees had heard statements similar to "our structure and organisation must be appropriate for today's demands," or "change is inevitable" before.[29] Yet over the following three years the organisation underwent what Dunphy and Stace have described

---

[25]

[26] Flanagan, "An Open Letter to all Commission Employees - 23 February, 1988".

[27] "Elcom in the 90's", *Network*, Electricity Commission of New South Wales, April 1988.

[28] ———, "An Open Letter to all Commission Employees - 15 April 1988".

[29] ———, "An Open Letter to all Commission Employees - 23 February, 1988".

as “strategic, incisive, and painful” organisational and cultural change.[30] They describe Flanagan’s change strategy as one characterised by the need for urgent action on entrenched organisation values and culture.[31] A focus on power station construction had to be replaced by one mindful of the business imperatives of cost and efficiency.[32] In essence, this somewhat dramatic strategy was aimed at eliminating a reliance on out of date mindsets anchored in the past.[33] Prominent outcomes of this period were a flatter organisational structure, greater delegation of authority and responsibility, the decommissioning of redundant assets, and the highly visible and dramatic reduction in employee numbers. Technically, improvements in operational efficiencies followed on from the plant improvement studies of the mid-to-late 1980s.[34]

The entrenched organisational values and culture that “Elcom in the 90s” was attempting to address were a function of not only those in senior management but also the entire Electricity Commission workforce. Such values were, in part, a function of low staff turnover and the relatively specialised nature of power generation technology. This was most evident in a number of regional areas where alternate employment opportunities in similar technical or engineering fields were limited. While there was considerable staff movement within the organisation, alternate employment in other power generation utilities required an interstate relocation. The relatively high pay and penalty rates also effectively tied some employees to the ECNSW. Long-term employee stability is perhaps best illustrated by it not being uncommon for a core of individuals on power station operating and maintenance work teams to remain together for a decade or more.

---

[30] Doug Stace and Dexter C. Dunphy, *Beyond the boundaries : leading and re-creating the successful enterprise* (Sydney: McGraw-Hill, 1994). 105.
[31] ———, *Beyond the boundaries : leading and re-creating the successful enterprise*: 114.
[32] "Elcom in the 90's".
[33] ———, *Beyond the boundaries : leading and re-creating the successful enterprise*: 110.
[34] *Liddell Power Station: Plant Improvement and Life Extension Study: Execurive Summary*: 1988.

In addition to structural change, the organisation acknowledged that its cost structures had to change also. With an external debt of over $6 billion in 1989, Flanagan was at pains to point out that the organisation could not continue using tariff increases to cover costs.[35] He argued that the organisation's focus needed to be on results, cost reduction and improved utilisation of assets. [36] Peter Graham, the organisation's Personnel Manager, was also of the opinion that one of the major tasks of "Elcom in the 90s" was to reduce costs and that reducing staff numbers was a major part of this exercise. In 1982 over 11,200 people had been employed. In the period 1981/82 to 1987/88, employee numbers fell by a relatively small seven per cent. In the next six years due to natural attrition and targeted voluntary redundancies, staff numbers fell by nearly 5000 or forty-five per cent.[37] Coupled with a seventeen per cent increase in electricity sales over the same period this equated to an increase in employee productivity (GWh/Employee) of over seventy per cent.[38]

While these dramatic movements in employee numbers and employee productivity are impressive, for many of the employees remaining in the organisation, the term "improvement" would not have typified this period. Reduced staff numbers required changes in work practices and the reallocation of work responsibilities. C.Y.C. Luk cites a number of presumably Head Office staff who, during this period, had lost the sense of belonging, and had developed a sense of job insecurity.[39] In contrast, many power station employees, while acknowledging that redundancies were voluntary, seemed to be not so much concerned with job security, rather with apprehension about the increased workload for those people that remained. Opinions on the issue of staff reductions were not confined to those in the organisation. Premier Greiner is reported to have commented that it had "always been clear that the SRA [State Rail Authority] and Elcom were the areas of

---

[35] *Annual Reports of the Electricity Commission of New South Wales / Pacific Power.*
[36] "Elcom in the 90's".
[37] *Annual Reports of the Electricity Commission of New South Wales / Pacific Power.*
[38] *Annual Report for the Year Ended 30th June 1991*: 1991, 15-16.
[39] Chun Yu Catherine Luk, "Generating Change: Corporatisaion and Strategic Human Resource Management in Pacific Power" (University of New South Wales, 1996), 48.

the largest amount of featherbedding."[40] Between June 1988 and April 1989 nearly 11,000 Public Service positions were deemed redundant.[41] Nearly 3,500 were lost from the SRA, 3,000 from the Department of Education, along with a further 2,000 from Elcom.[42]

As dramatic as these reductions in employee numbers were, the Electricity Commission was also mindful that relations with its employees needed to improve. With this in mind, an ambitious program of workplace reform aimed at developing a more flexible and mobile workforce was undertaken. Launched in March 1989, this program, known as the Training Efficiency and Multi-skilling (TEAM) Plan, also embodied the Commission's response to the Commonwealth Government's Award Restructuring initiative.[43] The centrepiece of this process was a new Consent Award embodying a single award covering all employees in six classifications along with a simplified forty-point salary structure. This replaced four separate Awards, one agreement, 620 salary classifications and a complicated 300-point salary structure.[44]

Culturally, the most dramatic change brought on by "Elcom in the 90s" was the change in the organisation's trading name. The new name, Pacific Power, reflected a symbolic turn from the past to reinforce the administrative and cultural changes. The executive viewed the name change as a visible expression to the organisation's own employees and external observers that an inward focused engineering organisation was now one with a pronounced outward focus.

---

[40] Alicia Larriera and Matthew Moore, "No End in Sight to Job Cutting, Greiner Warns", *Sydney Morning Herald*, 24 July 1989.
[41] Alicia Larriera, "Greiner's Job Cuts Top 12,500", *Sydney Morning Herald*, Sydney Morning Herald, 11 July 1989.
[42] ———, "Greiner's Job Cuts Top 12,500". *Annual Reports of the Electricity Commission of New South Wales / Pacific Power.*
[43] *Annual Report for the Year Ended 30th June 1990*: 1990, 38-39.
[44] *Annual Report for the Year Ended 30th June 1992*, 1992, 26. *A Single Award for all Commission Employees*: 1991, 1.

Structurally, however, the most visible outcome of the “Elcom in the 90s” period was the administrative reforms involving the creation, in 1991, of internal, cost-orientated, business units. For four decades, the Commission’s organisational structure had been based on centrally controlled functional responsibilities.[45] In the 1991 restructure, the seven power stations were grouped into three business units broadly based on their geographical location. Pacific Power Western incorporated Wallerawang and Mt Piper power stations in addition to gas turbines, hydro stations and management of the EC’s share of the Snowy’s output. Bayswater and Liddell were part of Pacific Power Hunter, and Vales Point, Munmorah and Eraring joined Pacific Power Central Coast.[46] This restructure was partly an outcome of one of “Elcom in the 90s” primary principles of the delegation of responsibilities and a focus on results.[47] Each of the regional generating business units became responsible for many functions, including finances and human resources, which had previously been centralised Sydney based functions. In terms of the centralised control of NSW electricity generation, Pacific Power remained the parent body. However, the generation business unit configuration, while an internal structural change, was the first intimation of the post-1996 disaggregated generation industry structure.

As with other structural and management changes in this period, the creation of business units was a practical implementation of economic rationalist values. In this instance, it was the injection of internal competition through a process that required a “fee for service” for all internal transactions.[48] At the production level, the introduction of business units supported the implementation of the organisation’s internal wholesale

---

[45] Engineering Divisions: Power Projects, Generation, Transmision , System Control and Fuel. Commercial, Administrative and Service Divisions: Financial, Personnel, Computer Services and Legal.

[46] Hunter Business Unit comprised Liddell and Bayswater Power Stations. Cenral Coast Business Unit - Eraring, Vales Point B and Munmorah. Western Business Unit - Wallerawang and Mt Pipers Power Stations.

[47] "Elcom in the 90's".

[48] Bunyon, "Restructuring Australia's Electricity Supply Industry," 5.

electricity market - Electricity Exchange (ELEX). Each generating business unit had to submit bids for permission to sell the output of each of its power stations to a centralised internal electricity pool. The organisation's 1993 Annual Report observed that the introduction of business units and ELEX had been instrumental in stimulating improvements in production efficiencies and enhancing an increased awareness of the basis of production costs.[49]

Partners in Performance: aligning employee behaviours

The radical change process, implemented in the "Elcom in the 90s" (1988-1992), while breaking with the past and refocusing the organisation on different goals, did not necessarily result in changes in employee behaviour.[50] Built on the successes of the earlier program's structural changes, the July 1992 "Partners in Performance" initiative aimed to develop employee behaviours appropriate for the new results orientated mode of business. As the vehicle to refocus employee behaviour, new General Manager, Ross Bunyon, proposed a team approach to his goal of industry leadership.[51] While he acknowledged the advances of the "Elcom in the 90s" years, he was, however, aware that if the organisation was to remain the industry leader, continuous improvement in the management and operation of the organisation was required. [52]

As with "Elcom in the 90s", the implementation of many of the initiatives embodied in "Partners in Performance" had a basis in economic rationalist values. Employees were encouraged to become so-called owners of their part of the business. Pride in the technical, operational and financial success of their team, would, it was envisaged, translate into technical, operational and financial success for the organisation. These initiatives were augmented by programs of personnel development, and the recognition

---

[49] *Pacific Power Annual Report - 2000*: 16.
[50] Stace and Dunphy, *Beyond the boundaries : leading and re-creating the successful enterprise*: 103-08.
[51] Ross Bunyon, "Aiming for Number 1", *Network*, Pacific Power, April 1992.
[52] ———, "Aiming for Number 1".

and rewarding of excellent performance.[53] At a workplace level, teamwork was highly visible in the form of self-managed teams. The focus on outputs and results was evident in the concept of meeting the requirements of both internal and external customers through the application of continuous improvement initiatives and Total Quality Management (TQM) concepts and tools.

Improving the efficiency of the production process

While the organisation underwent significant organisational and cultural changes during "Elcom in the 90s" and "Partners in Performance," the primary technical focus was improvement in the efficiency of the electricity production process. General thermal efficiency improved from thirty-three per cent to 35.5 per cent; the Forced Outage Rate fell dramatically from 19.3 per cent to 4.6 per cent (Figure 7.2).[54] Partly as a consequence of a dramatic fall in employee numbers, employee productivity improved from 5.08 GWh/employee in 1989 to 7.4 GWh/employee in 1992 and 9.04 GWh/employee in 1994 – an overall seventy-eight per cent improvement.[55]

However, crucial to the overall technical and financial efficiency of the organisation was a reduction in the target and actual Reserve Plant Margin. This was essential if future capital works spending was to be minimised on new plant that would be underutilised or relegate older yet operational plant to standby status. [56] Any improvement in the Reserve Plant Margin could only be achieved if the availability of existing generating plant was improved substantially.[57] In 1987/88, the Electricity Commission's thermal plant had an

---

[53] *Pacific Power Annual Report - 1993*: 14.
[54] *Annual Reports of the Electricity Commission of New South Wales / Pacific Power*. London Economics Limited, *Measuring the Efficiency of the Australian Electricity Supply Industry* (Sydney: Electrical Supply Association of Australia Limited, 1993). 59-90.
[55] *Annual Reports of the Electricity Commission of New South Wales / Pacific Power*.
[56] Reserve Plant Margin is the total installed MW capacity less the peak MW demand expressed as a percentage of peak demand. (1994 Pacific Power Draft Strategic Plan, 76)
[57] Availability is a measure of the capability of generating plant for production compared to the total energy production if the plant had operated continuously. (1994 Pacific Power Draft Stategic Plan, 73) *Strategic Plan: Meeting Customer Demands*: 1989, viii.

Available Capacity Factor of 63.9 per cent, and by 1991/92, this had been improved to 86.1 per cent (Figure 7.3).[58] This improvement was a significant contribution to a reduction in the Reserve Plant Margin that fell from 34.3 per cent to 9.7 per cent in the four years to 1992 (see Figure 7.4). Impressive as this reduction was, the raw figures are arguably more so. Total installed generating capacity was reduced from 12,137 MW in 1987/88 to 10,830 MW in 1991/92 with the decommissioning of a number of old, less efficient power stations.[59] In comparison with other Australian thermal generating utilities, these improvements are notable. In three measures (Forced Outage Factor – Figure 7.2, Available Capacity Factor – Figure 7.3 and Reserve Plant Margin – Figure 7.4), Pacific Power however, starting from a lower base, only achieved relative parity with the other utilities. Figure 7.2, for example, illustrates that the SECV's Forced Outage Rate remained less than ten per cent during the period, while Pacific Power's was reduced substantially only to achieve a comparable value. Similar trends are evident in Pacific Power's Available Capacity Factor and Reserve Plant Margin – dramatic improvements only to achieve parity with comparable utilities.

By 1994, Chairman John Conde acknowledged that great strides had been made in workplace reform, enhanced levels of employee skills and competency and in the continuing improvement in power station efficiency and productivity.[60] Pacific Power had become stronger, more profitable, and a competitive organisation that was benefiting from economies of scale, technological developments and its domination of the NSW electricity industry.

---

[58] The initial improvements in Availability can be partly attributed to the introduction of Shift Work Maintenance in 1986 and a Union agreement to allow Mainteance Contractors to be involved in plant outage maintenance.

[59] *Annual Reports of the Electricity Commission of New South Wales / Pacific Power.*

[60] *Pacific Power Annual Report - 1994*: 3.

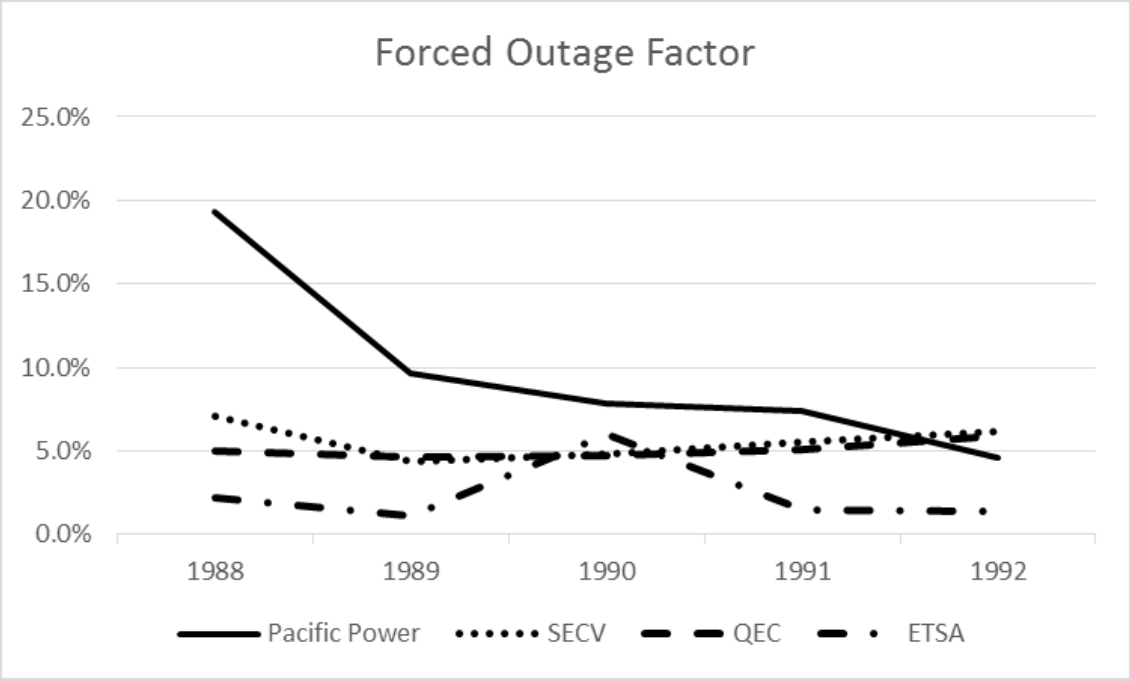

Figure 7.2 Generation Forced Outage Factor 1988-1992
Source: *Government Trading Enterprises Performance Indicators 1987-88 to 1991-92*. (Belconnen, ACT Industry Commission, 1993). 56-89.

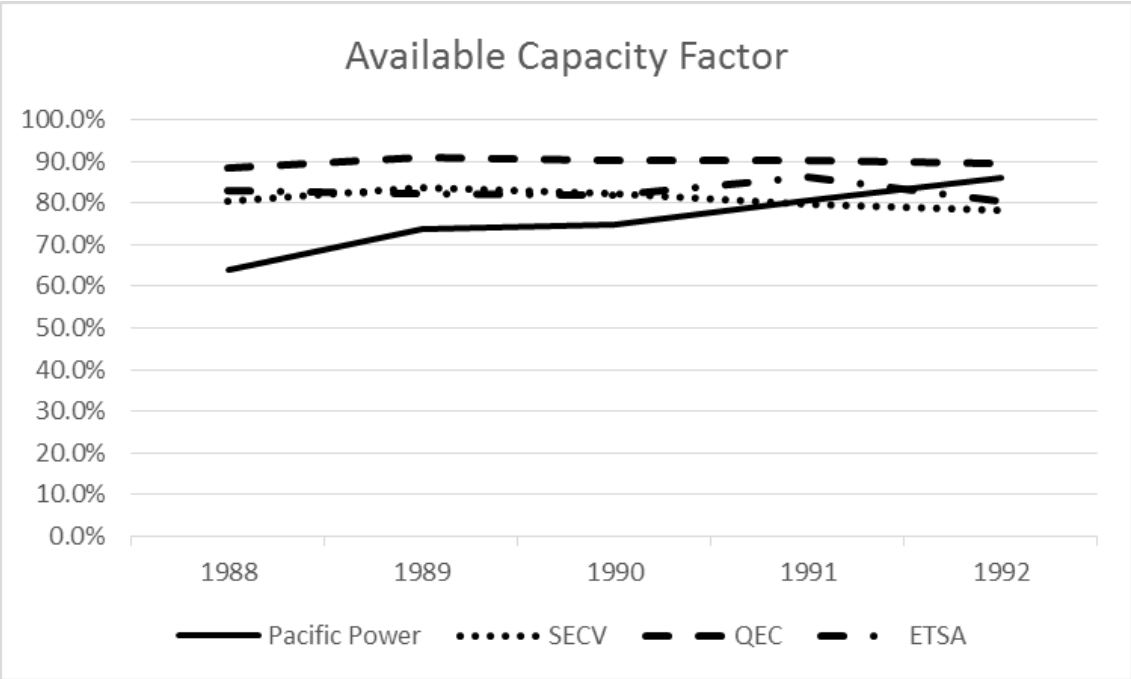

Figure 7.3 Generation Available Capacity Factor 1988-1992
Source: *Government Trading Enterprises Performance Indicators 1987-88 to 1991-92*. (Belconnen, ACT Industry Commission, 1993). 56-89.

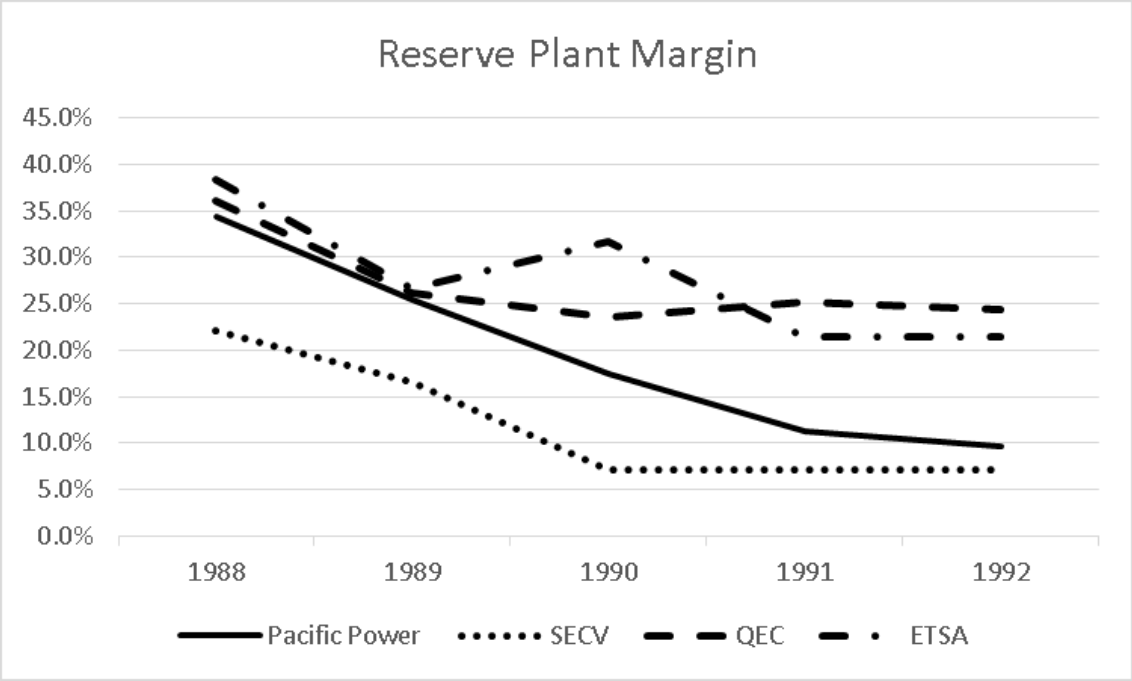

Figure 7.4 Generation Reserve Plant Margin 1988-1992
Source: *Government Trading Enterprises Performance Indicators 1987-88 to 1991-92*. (Belconnen, ACT Industry Commission, 1993). 56-89.

Pacific Power: a provider of international energy services

With the completion of Mt Piper Power Station in 1993, and the prospect of further major power station design and construction projects in NSW curtailed by the 1986 Electricity Generation Planning, and the 1988 Focus on Reform Inquiries, the organisation had underutilised engineering and project management expertise. The Executive saw the opportunity to use this expertise to take advantage of external business opportunities in other Australian states and Asia. It was hoped that potential energy service customers would view Pacific Power's vertical integration – coalmines to HV transmission - as evidence of Pacific Power's engineering and project management expertise in a diverse range of power generation and transmission fields. The quest for external business opportunities also stemmed from Pacific Power's involvement in events related to the development of a NEM. From the early 1990s, Pacific Power became

increasingly aware that its participation in this market had the potential to raise questions about the extent of its market power, and as a consequence its long-term viability as a complete integrated organisation. [61] It was hoped that the newly formed Pacific Power International (PPI) business unit's contribution would enhance and strengthen Pacific Power's continued viability in the eyes of the State Government, if not the national industry as a whole.

Created in 1992, PPI by 1995, had tendered for and been awarded several contracts to provide engineering services both in Australia and overseas. The most prestigious of these were those associated with Pha Lai #2 Power Station in Vietnam. In this joint venture with the Electric Power Development Corporation of Japan, PPI's role was as Electricity Vietnam's Owner's Engineer. PPI provided technical advice on the construction of the power station. Other contracts held by PPI included an environmental monitoring consultancy in China's Zhejiang Province; the operation and maintenance of Collie Power Station in Western Australia, and a contract for construction coordination services at Tarong North Power Station in south-east Queensland.[62]

At the employee level, Pacific Power and PPI's interstate and international focus was often judged on each individual's position in the organisation and how this new focus affected them. Many in the Sydney Head Office, particularly those directly involved, embraced the new external approach. This was particularly so for those with power project design skills, environmental, technical staff and others with marketable expertise. Similarly, in the power stations and other regional areas, employees with marketable skills tended to embrace the new paradigm, especially if there was a prospect of interstate or international travel. For the majority of staff, however, the organisation's external ambitions were often acknowledged as not directly affecting their immediate workplace. Some, perhaps yet to assimilate the changing business environment, were uneasy with the perceived relegation of the importance of electricity production. For many power station

---

[61] Nathan Vass, "Chief's Plea for Utility", *Sydney Morning Herald*, 5 October 1995.
[62] *Pacific Power Annual Report - 1996*: 12.

staff, the generation and sale of electricity remained the organisation's primary role and the source of the finances that funded interstate and international ambitions.

Industry structure – interstate comparisons

Any discussion of the organisational successes and failures of the Electricity Commission / Pacific Power in this, or any period, has the risk of being narrow, even parochial, if it is not viewed in the context of other Australian electricity generators. Electricity generation in Australia in the late 1980s remained state based and in public ownership. While the ECNSW operated generation and transmission functions, other state based power utilities also controlled distribution and retail. The Queensland Electricity Commission (QEC) operated the generation and transmission functions, with distribution and retail the responsibility of regional Electricity Boards. This structure is considered fully vertically integrated as the Electricity Boards reported to the QEC. The SECV, Electricity Trust of South Australia (ETSA), Tasmania's Hydro-Electricity Commission (HEC), and Western Australia's State Electricity Commission continued to operate as fully vertically integrated utilities.

While the control and operational structure of a number of these utilities had been in place for many years, the late 1980s and early 1990s witnessed the beginning of initiatives that would see these structures radically altered. In a broad sense, the initial rationale for these initiatives was, as has been discussed in the case of Pacific Power, the quest to improve each state based industry's production efficiency. Pacific Power's implementation of shiftwork maintenance, the use of contract maintenance and internal administrative reforms are examples. It was, however, the initiatives by the Commonwealth and the states to develop a south-east Australia electricity market that were at the forefront of the marked changes to Australia's electricity generation industry.

As noted in Chapter Four, high voltage transmission interconnections between NSW and Victoria, via the Snowy Mountains Hydro-electric Authority were established in 1959. Interconnections to South Australia via Victoria were established in December 1989. These interconnections facilitated the emergency transfer of electricity between state based generating authorities. However, direct cross-border generator to distributor

sales, while physically possible, did not be take place until the implementation of the NEM from December 1998.

Victoria became the first state to carry out major structural reforms through asset sales and by separating the SECV's generation and transmission activities. In December 1992, the Victorian Government partially privatised Loy Yang B Power Station through a 51 per cent sale to Edison Mission Energy Australia. This sale, however, was not related to any industry reform program; rather it was part of an emergency debt reduction program launched by the newly elected Kennett Liberal State Government. In October 1993, the Kennett government disaggregated the SECV into three corporatised government Trading Entities - Generation Victoria, National Electricity (transmission) and Electricity Services Victoria (distribution). The NSW Labor government did not pursue a similar course of action principally on the grounds that privatisation was not party policy as well as Pacific Power's opposition to such a move.

Industry structure – international comparisons

As noted in previous chapters, the broad similarities in the structural development of the NSW electricity industry, that is, isolated plant; individual systems; regional systems; and interregional systems, is also evident in a number of international and other Australian states and jurisdictions. However, direct comparison of the NSW electricity supply system with those in other jurisdictions is often problematic. Any comparison between Australian states needs to be mindful of each jurisdiction's political, social, economic, natural resource and demographic settings. This is in addition to any common nationwide influences. Comparisons at an international level are even more problematic. Apart from the common international economic environment, jurisdictions geographically close together such as NSW and New Zealand, or historically and commercially linked such as NSW and the United Kingdom, have differing local forces driving development, often in different time frames. Nevertheless, the high degree of similarity in the structural development of the generation, HV transmission control and operation structures of England and Wales, NSW and New Zealand is marked. The creation of national or statewide electricity grids, while occurring in different time periods, were generally to eliminate multiple, fragmented and inefficient generation and transmission systems. The components in each jurisdiction were initially in public ownership, although those in

NSW were the only ones to remain so, at least until the second decade of the twenty-first century.

The control and operational structure of the England and Wales electricity supply industry in the late 1980s had been in operation since 1947.[63] The interconnected national grid, operating at 132 kV, had been established in 1938 and nationalised generation since 1947. Under the control of the British Electricity Authority (BEA) and later the Central Electricity Generating Board (CEGB), the 132 kV national grid had been augmented with 275 kV and later 400 kV transmission lines to cater for the increased demand and power flows. Figure 7.5 illustrates the basic control and operation structure from 1947 to 1991.

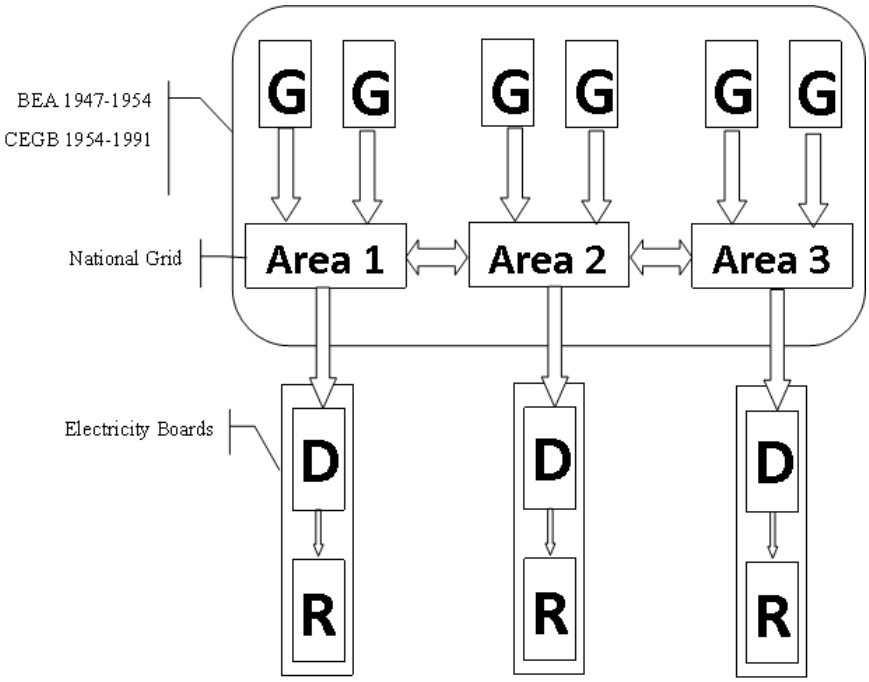

Figure 7.5 England and Wales electricity supply structure 1947-1991

Figures 7.6 and 7.7 illustrate the control and operational structure of the NSW and New Zealand ESIs. In both jurisdictions, generation and HV transmission were operated as a centrally controlled monopoly. Figure 7.6 also shows the restructure of Pacific Power generation into three business units; Hunter, Central Coast and Western.

---

[63] Cochrane, *Power to the People: The Story of the National Grid*: 29.

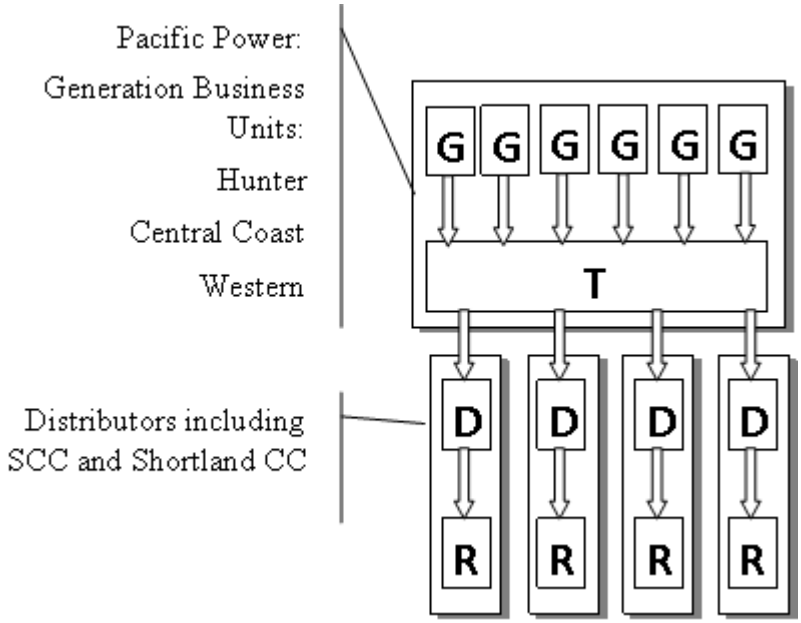

Figure 7.6 NSW electricity supply industry 1991-1995

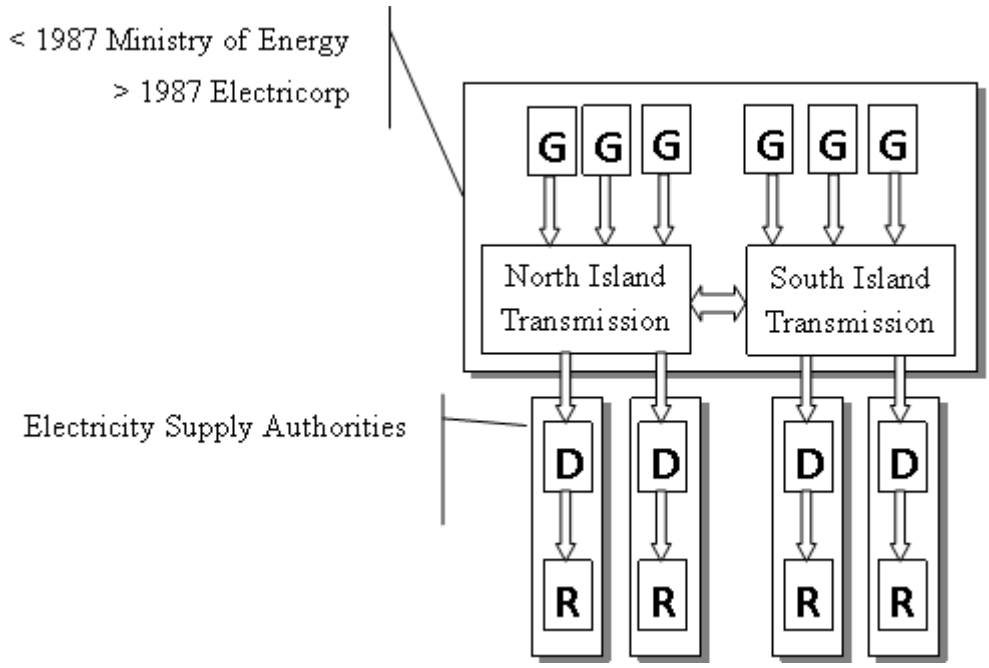

Figure 7.7 New Zealand electricity supply structure April 1987

By 1994, the electricity supply industries in all three jurisdictions were at different stages of imposed structural reform. Because it had begun the reform process earlier, the UK government had privatised the CEGB's generation into three entities. As Figures 7.8

and 7.9 illustrate, the UK and New Zealand disaggregated HV networks and generation sectors. A similar separation of the NSW HV network did not take place until 1995.

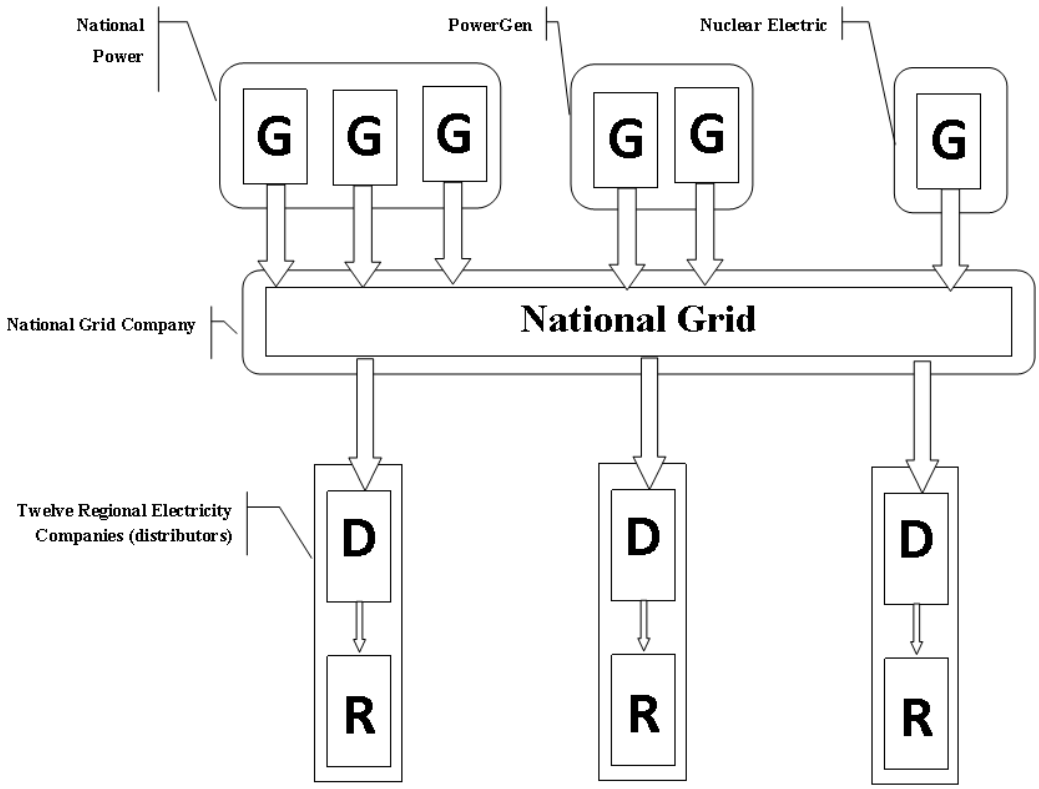

Figure 7.8 England and Wales electricity supply structure – 1991

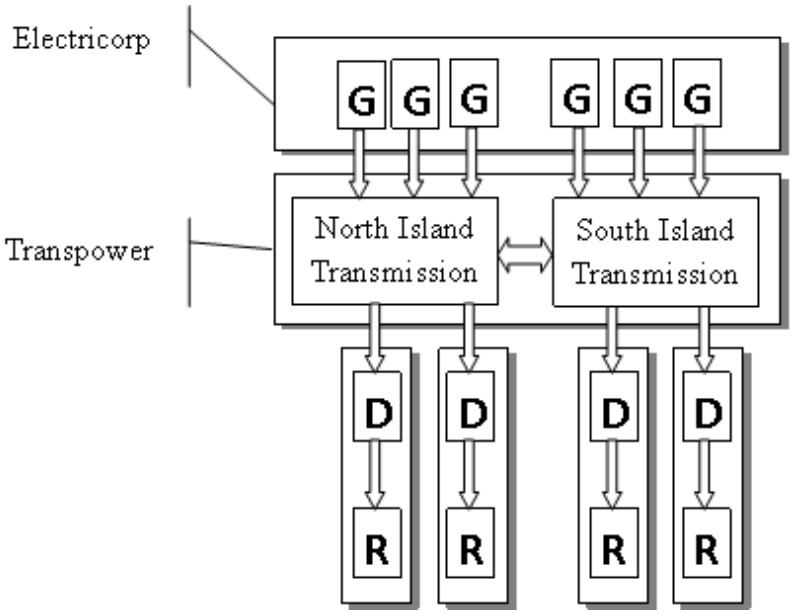

Figure 7.9 New Zealand electricity supply structure – 1994

Conclusion

Where the 1986 *Generation Planning Inquiry* brought thirty-six years of steady expansion to a close, the election in 1988 of the conservative Liberal State Government heralded a different and challenging future for the Electricity Commission. Prior to 1986, the provision of a reliable supply through continual expansion of production capacity had become the norm. After 1988, with reliability of supply virtually guaranteed by excess capacity, the organisation's focus turned to a quest for administrative and operational efficiency and external business opportunities. While the 1988 election provided the environment for the changes, the catalyst was the government's economic rationalist inspired Commission of Audit and its *Focus on Reform* report. To a lesser, yet significant, extent, the 1987 inquiry into the Electricity Commission's management of the Ravensworth Coal Washery project also provided a basis for the organisational changes that followed.

The Electricity Commission's response to the changing environment highlighted by these two inquiries was in two phases. The first in 1988 was the 'Elcom in the 90s' initiative, followed in 1992 by the 'Partners in Performance' program. 'Elcom in the 90s' primary intent was to engineer a strategic break with an organisational mindset anchored in the past and dominated by increasing production capacity as the sole solution to the provision of a reliable supply. To achieve such a fundamental revision, a number of economic rationalist inspired tactics were initiated. These included: internal restructuring; delegation of managerial responsibility; and improvements in plant operating efficiencies.

For many employees, the most visible, the most welcome, and at the same time the most controversial initiative of 'Elcom in the 90s' were the voluntary redundancies offered to employees from the late 1980s. These were responsible for the highly visible dramatic reduction in staff numbers across the organisation. Many employees welcomed the opportunity to leave the organisation with a moderate termination package. Nevertheless, the increased workload to be shouldered was of concern to many of remaining employees.

'Elcom in the 90s' initiated a strategic break with past practices, whereas 'Partners in Performance' focused on changing employee behaviours to reflect the new organisational

structures and business approach. The latter initiative also embodied many aspects of economic rationalist philosophy including self-managed teams; employees encouraged to 'own' their part of the business; skills enhancement; rewards for outstanding performance; and the application of TQM processes. Significant developments in workplace reform and enhanced levels of employee skills and competency followed.[64]

Technically, the Electricity Commission's response to 'Elcom in the 90s' focused on a strategy that embodied the basic premise that the era of expansion of production capacity was at an end and that to ensure a reliable supply of electricity, improved management of existing assets was crucial. Improvements in the production efficiency of thermal plant; a reduction in the Forced Outage Rate, and increased plant availability, paralleled the decommissioning of old inefficient plant. While these and other indices improved significantly, they nevertheless only achieved comparable levels of other Australian jurisdictions, notably Victoria, by the mid-1990s.

Up to 1992, the Electricity Commission had been responding to issues identified by government initiated inquiries. The change in trading name to Pacific Power and the quest for interstate and international business opportunities were, however, Pacific Power's initiative. The name change was intended to announce the new organisation, a new business model, a change of direction to both the external business community and employees. For prospective clients, it announced a new player in the energy services arena. For employees, in addition to being confirmation that the organisation had acquired an external outlook, it offered the prospect of an improved future to those with un-utilised power project design and management skills after the completion of Bayswater and Mt Piper.

At the time of the name change, Pacific Power executives would have been mindful of the concurrent initiatives related to the national electricity market. Whether a connection had been made in 1992 between the value of being a vertically integrated organisation

---

[64] *Pacific Power Annual Report - 1994,* 3.

and the potential for external business contracts, is difficult to determine. However, by 1993 and certainly by 1994, the connection had been made and was to become a major argument against disaggregation.

Over the course of the history of the Electricity Commission and Pacific Power, the first thirty years were indeed the golden years of growth and expansion. The early to mid-1980s were years in which the bubble of a predictable future burst on the rocks of technical failures, an economic downturn, overcapacity and an end to reliability of supply being the only organisation performance measure. The final decade would present unprecedented challenges to all in Pacific Power in parallel with opportunities and disappointments for many.

Chapter 8 Industry Liberalisation and Pacific Power's Disaggregation (1990-1998)

Introduction

The period 1990 to 1998 were years of significant change for the ECNSW / Pacific Power and the NSW electricity generation and transmission industry. Two separate but intertwined developments were under way. The first, the internal administrative and cultural changes, we have seen, transformed the traditional, bureaucratic, engineering focused Electricity Commission (ECNSW) into the commercially focused Pacific Power. For over forty years, the Electricity Commission had focused on ensuring reliability of supply through the construction of new generating and transmission capacity. This had often been with little regard for production costs, production efficiencies and the liability of a multibillion dollar debt. The restructure of the Electricity Commission and initiatives to commercialise Pacific Power were forerunners to the second development – NSW's involvement in the liberalisation of the south-eastern Australia electricity industry. For Pacific Power, liberalisation involved the vertical and horizontal disaggregation of the organisation. The vertical ownership link between generation and transmission was dissolved as transmission assets were transferred to a newly created State Owned Enterprise (SOE). Horizontal ownership of generation was divided as two new SOEs acquired seventy-five per cent of Pacific Power's generation portfolio.[1]

This chapter explores the transition of Pacific Power from the largest electricity generator in both NSW and Australia into the smallest of the three major NSW generators. The major themes discussed include the evolving structure of the industry in the mid-1990s; liberalisation of the electricity supply industry, and Pacific Power's response to these developments. Interstate (Victoria) and international (New Zealand, England and Wales) comparisons develop the discussion. Supplementary themes examine

[1] The terms 'disaggregation or 'disaggregate' (seperation / seperate) are used throughout the discussion as these were the terms used by Pacific Power to describe the events.

Pacific Power's engineering activities in this period and an analysis of its role as a corporate environmental citizen.

The chapter concludes that Gavin McDonnell's 2004 comment that ECNSW/PP was technically advanced was a fair characterisation.[2] However, while his description that the organisation was politically powerful may have been correct during earlier decades, by the mid-1990s its influence had declined significantly. Pacific Power's vocal opposition to disaggregation was countered by the appointment of a Chairman favourable to the breakup of the organisation, while its tacit support for some level of privatisation foundered on trade union and community opposition.

Industry structure

In 1990, the NSW electricity network was commencing its fifth decade as a coordinated regional system with the ECNSW as the major NSW generator of electricity (see Figures 8.1 and 8.2). By mid-1996, generation and transmission were no longer controlled by a single, centralised, publically owned organisation. Part of Pacific Power's assets had been divested to three new publicly owned authorities – one transmission and two generation.[3] In this transition to a coordinated disaggregated regional system, Pacific Power, first lost control of its transmission assets and later the majority of its generation portfolio to become the smallest of the NSW generator.

---

[2]

[3] The three NSW generators were Macquaire Generation, Delta Electricity and Pacific Power.

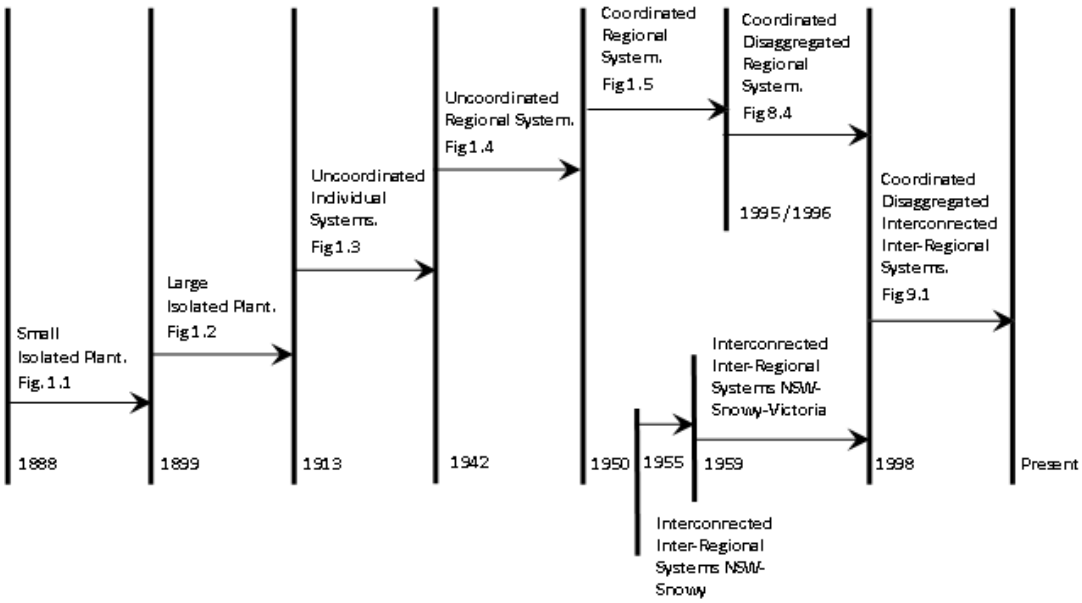

Figure 8.1 Model of power system development adapted for the NSW context. Source: Adapted by the author from John A. Casazza, *The Development of Electric Power Transmission: The Role Played by Technology, Institutions, and People*, IEEE Case Histories of Achievement in Science and Technology. New York: Institute of Electrical and Electronics Engineers, 1993. p7.

The structure of the NSW industry up to February 1995, as shown in Figure 8.2, continued Pacific Power's dominance of the NSW generation industry. It generated over ninety per cent of NSW's electricity and transported it to county councils and large industrial customers over its own HV transmission network. The creation of separate internal regional generation business units to replace the centralised Generation Division in August 1991, and the progressive transfer of its 132 kV network to the county councils, were the only structural changes from previous decades.

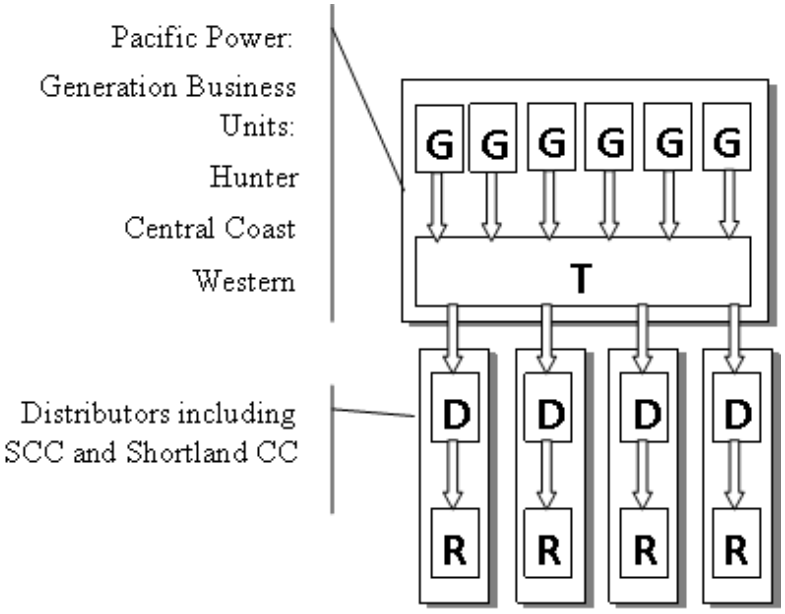

Figure 8.2 NSW electricity supply industry August 1991 – February 1995

The first phase of the transition to a coordinated disaggregated regional system involved the unbundling, or separation of generation and transmission. Formation of PacificGrid, a subsidiary of Pacific Power in July 1994, and its later separation as TransGrid, a new SOE, in February 1995 ended Pacific Power's control of HV transmission. Figure 8.3 shows the industry's configuration between February 1995 and March 1996. The creation of TransGrid was not the end of centralised public control of this part of the industry, merely a change in the owner and operator of the transmission assets.

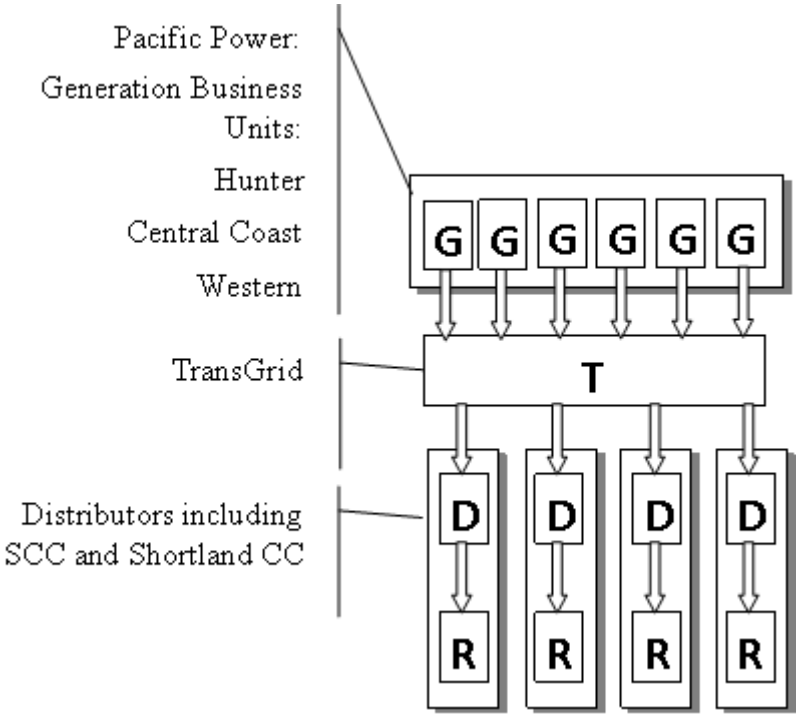

Figure 8.3 NSW electricity supply industry February 1995 - 1 March 1996

Further disaggregation of Pacific Power came with the creation of two new SOEs - Macquarie Generation and First State Power (later known as Delta Electricity) in March 1996. See Figure 8.4. While TransGrid, Macquarie, Delta and Pacific Power remained in public ownership, their creation ended nearly forty-six years of centralised ownership of electricity generation and HV transmission in NSW.[4]

[4] TransGrid had carriage of coordination of daily generation dispatch for the three NSW generating utilities.

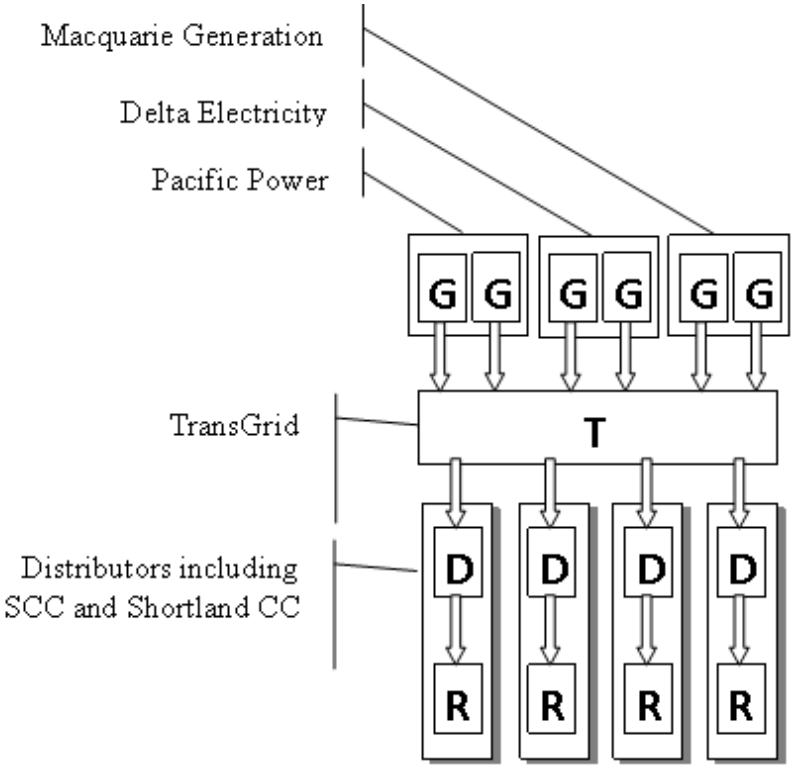

Figure 8.4 NSW electricity supply industry > 1 March 1996

Prior to March 1996, Pacific Power's generation portfolio totalled 11,855 MW.[5] Afterwards, it became the smallest of the three major NSW generating utilities with an installed capacity of 2,975 MW. This is compared with Macquarie's 4,640 MW and Delta's 4,240 MW.[6]

Liberalisation

Prior to examining Pacific Power's responses to liberalisation of the industry, it is appropriate to explore a number of important aspects of the liberalised electricity supply

---

[5] *Pacific Power Annual Report - 1994,* 78.

[6] Pacific Power's generation portfolio, Eraring Power Station - 2,640 MW, Brown Mountain Hydro - four MW, Burrinjuck Hydro - 10 MW, Hume Hydro - 25 MW, Keepit Hydro - six MW, Shoalhaven Hydro - 240 MW, Warragamba Hydro - 50 MW. Macquarie Generation's generation portfolio, Bayswater Power Station - 2,640 MW, Liddell Power Station - 2,000 MW. Delta Electricity's generation portfolio, Mt Piper Power Station - 1,320 MW, Munmorah power Station - 600 MW, Vales point "B" Power Station - 1,320 MW, Wallerawang "C" Power Station - 1,000 MW.

industry and the national electricity market. The southeast Australian wholesale electricity market is based on the concept of an 'electricity pool' operating as a single coordinated entity across all Australian states except Western Australia and the Northern Territory. This arrangement encompasses two principal, yet separate, processes – the physical flow of electricity and the flow of money. The NSW political and organisational aspects of this arrangement are discussed in this chapter while operational features are examined in detail in the next chapter.

Following disaggregation in May 1996, Macquarie Generation, Delta Electricity, Pacific Power, and NSW retailers, commenced trading through a rudimentary pool arrangement known as the State Electricity Market (SEM). This arrangement was expanded in February 1997 to allow Victorian based retailers to trade in NSW.[7] Pacific Power and the other NSW generators began trading in the Victorian electricity market via stage one of the NEM in May 1997, and in the full NEM from December 1998.[8] The National Electricity Market Management Company (NEMMCO) was the market operator until 2009 when it was renamed the Australian Energy Market Operator (AEMO) to reflect its management of both the wholesale electricity and natural gas markets.

As with the SECV in the mid to late 1980s, the ECNSW/Pacific Power had implemented internal administrative reforms and workplace culture change programs in the early 1990s. These were part of the commercialisation process aimed at ensuring that the organisation was managed in a manner similar to a private sector company. Sioshansi

---

[7] Ann Rann, "Electricity Industry Restructuring - A Chronology," Department of the Parliamentary Library, http://www.aph.gov.au/About_Parliament/Parliamentary_Departments/Parliamentary_Library/Publications_Archive/Background_Papers/bp9798/98bp21. [Accessed 29 January 2014].

[8] "National Electricity Market: a case study in successful microeconomic reform," KPMG, http://www.kpmg.com/AU/en/IssuesAndInsights/ArticlesPublications/Documents/national-electricity-market-successful-microeconomic-reform-2013.pdf. [Accessed 4 May 2014], 18.

and Pfaffenberger refer to this approach as corporatisation.[9] In many respects, the terms 'commercialisation' and 'corporatisation' are interchangeable. Both have characteristics of a public organisation operating as if it were a profit orientated private entity. In the case of Pacific Power, however, commercialisation is the preferred term as the State Government failed to incorporate the organisation in December 1991.[10]

Liberalisation, however, is not synonymous with either internal administrative restructuring or commercialisation reforms. Nevertheless, liberalisation followed administrative reforms and commercialisation or formal incorporation in NSW and other Australian electricity supply jurisdictions. The liberalisation process called for the introduction of competition between electricity providers at both the generation and retail levels. This involved the unbundling of integrated utilities, the removal of interstate borders as barriers to trade and 'free' access to the HV transmission grid for new entrants in the generation and retail sectors.

Politically, the decision to introduce market-based competition into the Australian electricity supply industry was made at a Special Premiers' Conference in July 1991. This decision, which was based on the May 1991 Industry Commission report, noted that considerable scope existed for efficiency improvements through increased competition in electricity generation and retail.[11] The primary recommendations focused on the vertical and horizontal disaggregation of each state's electricity supply industry. In addition, the report recommended that an independent body own and operate all HV transmission

---

[9] Fereidoon Sioshansi and W. Pfaffenberger, "Why Restructure Electricity?," in *Electricity market reform : an international perspective*, ed. Fereidoon Sioshansi and W. Pfaffenberger (Amsterdam: Elsevier, 2007), 204.

[10] John Conde and B. P. Flanagan: *Electricity Commission Restructure Continues*, 1991. Mark Coultan, "Elcom Plan Shelved, Not Abandoned: Minister", *Sydney Morning Herald*, 14 December 1991.

[11] Industry Commission, *Energy Generation and Distribution*, Preface.

assets; that a pooling arrangement (market) to trade electricity be established; and that publicly owned generation assets be privatised.[12]

Liberalisation, Pacific Power and disaggregation

As noted previously, the internal reforms to commercialise Pacific Power were self-imposed and in many respects had an overall positive outcome. Yet, when faced with industry liberalisation, senior management, if offered a choice, would likely have opted to preserve the status quo of being the primary owner and operator of the NSW generation and HV transmission functions. Nevertheless, speaking from a position of strength as the largest generator in the proposed national market, Pacific Power management was not opposed to competition being introduced into parts of the industry.[13] Even so, Pacific Power Chairman John Conde suggested that, in the short-term, the excess capacity that NSW and Victoria carried might hinder a truly competitive environment essential for a successful electricity market.[14] It is evident from Conde's comments that the ECNSW's concept of a competitive electricity market only extended to dismantling interstate barriers to trade. Either Pacific Power chose to ignore or interpret the 1991 Industry Commission's recommendation for separate or independent generators as endorsing the status of large state based generators such as itself and the SECV. This is not to suggest that Pacific Power was ambivalent, or dismissive of the prospects of having to operate in a competitive environment.

In July 1992, Pacific Power implemented an internal wholesale ELEX Market. Each generating business unit was required to compete to sell their output to an in-house electricity trading business unit for on selling to large industrial consumers and county councils. This internal electricity market and a subsequent paper trial of interstate bidding between November 1993 and April 1994 had the effect of improving generator

---

[12] Industry Commission, *Energy Generation and Distribution,* 17.
[13] *Annual Report for the Year Ended 30th June 1992,* 6.
[14] Michael Gill, "Excess Capacity Will Delay Open Electricity Market", *Australian Financial Review*, 5 November 1992.

efficiencies and increasing awareness of market operations and the financial performance of generating stations.[15] Despite its notional commitment to the development of a national electricity market, it is surprising that the NSW Liberal Government did not extend ELEX to the distribution industry.[16] ELEX ceased operation in 1995 with the transfer of Pacific Power's transmission function to TransGrid, which then had carriage of the development of a state based wholesale electricity market.

As forward thinking as these trials may have been, by 1995 the NSW electricity supply industry was being accused of not progressing the development of a reform program for the whole industry. NSW Treasurer Michael Egan's 1995 *Electricity Reform Statemen*t noted that the reform agenda in NSW had been overtaken by developments in Victoria.[17] Apart from the ECNSW implementing an internal business unit structure in NSW in 1992 as opposed to the SECV's similar move in August 1993, Victoria consistently implemented the necessary industry reforms before NSW. Victoria created a wholly owned HV transmission subsidiary (National Electricity) eleven months before Pacific Power created PacificGrid. National Electricity's successor, PowerNet Victoria, was disaggregated six months before TransGrid was split from Pacific Power. Generation Victoria, which had been corporatised in August 1993 to own and operate the SECV's generation assets, was disaggregated twenty months prior to the creation of Macquarie Generation and Delta Electricity. Finally, Victoria completed its privatisation program in 1999.

The November 1992 sale of fifty per cent of Loy Yang B Power Station by the Kennett Victorian Government signalled the end of centralised ownership of electricity generation in that state. This sale, which had been initially proposed by the SECV itself as part of a

---

[15] *National Electricity Market - Paper Trial Information Kit*: 1993, 1. *Pacific Power Annual Report - 1993,* 23.
[16] P.E Trimmer, "The Identification of Decision Processes Utilised in the Establishment of a Competitive Electricity Market in New South Wales and Nationally" (Master of Engineering Management thesis, University of Technology, 1996), 32.
[17] Michael Egan: *Electricity Reform Statement*, 1995, 6.

debt mitigation strategy embodied in its ‘no new debt’ policy was not related to electricity market development.[18] As with Pacific Power in 1994-1996, the seemingly sacrosanct model of monopolistic centralised ownership of state owned large generating assets was broken, indirectly, not by government decision, rather by the public electricity utility itself. By January 2015, NSW has privatised a substantial percentage of its generation assets.[19] The Liberal Coalition government’s success in the March 2015 State election confirmed that the partial lease of the high voltage transmission network would proceed.

Treasurer Egan’s 1995 comments, seemingly critical of Pacific Power, stemmed principally from two areas. First, the previous Liberal NSW Government, mindful of the technical complexities of participation in a national market, chose to assign responsibility for implementation to the industry itself.[20] The government limited its involvement, at least until Egan’s appointment as Treasurer in April 1995, to less than robust policy development and coordination of the reform process. Second, Pacific Power management's natural desire to keep the organisation as a single entity, and the significant emphasis it placed on the commercial benefits gave it an advantage when tendering for international energy service contracts.

Prior to 1996, the word most often quoted by Pacific Power senior management for the potential breakup of the organisation’s generation portfolio was "balkanisation.” In a geopolitical context, this term refers to the breakup of a state or region into several smaller often competing regions. Pacific Power’s General Manager and Chief Executive

---

[18] T.E Evans, "The Corporatisation of a Bureaucracy: The State Electricity Commission of Victoria 1982 to 1992" (Monash, 2001), 293-95.

[19] Ownership of former ECNSW/Pacific Power Generation assets at January 2015:
Origin Energy – Eraring Power Station; Shoalhaven Pumped Storage Scheme.
EnergyAustralia - Mt Piper and Wallerawang Power Stations
AGL – Liddell and Bayswater Power Stations
Trust Power - Hume, Keepit, Brown Mountain and Burrinjuck Hydro Power Stations
Trust Power – Blayney and Crookwell Wind Farms
Delta Electricity (NSW Government) – Vales Point and Munmorah Power Stations

[20] *Electricity Reform Statement*, 5.

Ross Bunyon first used the term in June 1993 in response to the prospect of Pacific Power being disaggregated.[21] Bunyon argued the breakup, or "balkanisation", of Pacific Power and other state based utilities, had the potential to increase costs because of the loss of economies of scale.[22] A regime of small-scale generators, he suggested, would be weaker than the whole; potentially be vulnerable to acquisition by international energy companies, and importantly lack the financial resources to upgrade existing plant or construct new generating capacity.[23] Bunyon's opinion of those proposing fragmentation of the industry is unmistakable. He believed that an "unholy alliance of vested interests, misguided bureaucrats and economic rationalists" viewed aspects of the liberalisation process as "sacred cows."[24]

Nevertheless, Bunyon conceded that competition between state based electricity utilities and the removal of barriers to interstate trade in electricity could only be of benefit to consumers. These benefits, however, were predicated on Pacific Power remaining a single entity. Size was crucial to Pacific Power's continuing strong commercial performance.[25] This strength is evident in indices such as the level of debt reduction and dividends paid to the government. In the period 1990 -1994, the organisation's debt was reduced by $1.3 billion, a twenty-seven per cent reduction and a thirty-eight per cent reduction from its peak in June 1988.[26] Dividends paid to the government were equally impressive; $2.04 billion over 1990-1994.[27]

---

[21] Ross Bunyon, "Business," *Network*, June / July 1993 1993. ———: *General Manager's Energy Outlook Address*, 1993, 2.
[22] ———, "Business."
[23] ———: *Electricity Industry Restructuring: What Pacific Power Stands for and What It Does Not.*, 1994, Internal Memorandum, 2.
[24] ———, "Business." Sigrid Kirk, "Power Chief Warns of Price Rises", *Sydney Morning Herald*, 25 June 1993.
[25] Ross Bunyon: *Pacific Power Annual Report - 1994*, 10.
[26] *Annual Reports of the Electricity Commission of New South Wales / Pacific Power.*
[27] *Annual Reports of the Electricity Commission of New South Wales / Pacific Power.*

Disaggregation and unions

Trade union opposition to disaggregation paralleled Bunyon's. Bernie Riordan, Secretary of the NSW branch of the Electrical Trades Union, noted that "if it ain't broke don't fix it."[28] The Association of Professional Engineers, Scientists and Managers Australia (APESMA) had similar views.[29] Opposition was also voiced at the workplace level. Two Construction, Forestry, Mining and Energy Union (CMFEU) members echoed many of the arguments for an intact Pacific Power raised by Ross Bunyon. Superior business, operating and environmental performances were cited as reasons not to disaggregate.[30] They also envisaged that opportunities for technical cross-pollination between power stations would be minimised if not eliminated as each disaggregated generator took steps to protect its technical and intellectual properties.

The appointment of Fred Hilmer, the author of the 1993 "National Competition Policy" report, as Pacific Power's Chairman in April 1995, highlighted the State Government's support for the introduction of competition into the electricity supply industry. The government's request that he advise on the future shape of Pacific Power is a noteworthy feature of his appointment.[31] Hilmer's Generation Reform Working Group's subsequent report was presented in August 1995. It is perhaps not a surprise, given Hilmer's involvement, that its primary recommendation was that Pacific Power should be disaggregated in the interests of promoting competition in the industry. With consumer choice as one of the cornerstones of the 1993 National Competition Policy report, it is not surprising that the choice of supplier, this time by retailers, was at the core of his argument for disaggregation. If Pacific Power were to remain the sole NSW generator, electricity retailers would not have any real competitive choice of supplier

---

[28] Bernie Riordan, "Notice to Members," (Electrical Trades Union of Australia, 1995), 2.
[29] Richard Gluyas, "Power Staff Fight Break-up Proposal", *The Australian*, 24 August 1995.
[30] Leigh Brydson and Colin O'Reilly, "One Pacific Power: An expression of opinion by the employees of Pacific Power," (Electricity Commission Salaried Operators Association, 1995), 1-12.
[31] *Electricity Reform Statement*, 3.

other than an interstate generator.[32] Prior to Queensland being interconnected to the southern electricity grid, the top four interstate generators accounted for seventy-four per cent of the NSW, Victorian and South Australian market.[33] Pacific Power had forty per cent of that market.

Of the two options offered by Hilmer's Generation Reform Working Group as possible structures for a disaggregated industry, the preferred option, and the one eventually adopted, created two multi-site base load utilities and a single site base load utility.[34] The two multi-generator utilities, Macquarie Generation and Delta Electricity, were of a size to be commercially viable and competitive in a market environment. Hilmer envisaged the single plant utility, Eraring Power Station, operating as an independent entity, with a range of future options for its structure and ownership. These included joining a multi-generator multi-state utility or a public float. As it was outside the Working Group's terms of reference, Hilmer only made reference to Pacific Power in the context of the utility to be disaggregated and that it be the temporary owner of Eraring. He makes no comment on the overall role Pacific Power could play post disaggregation.

Despite being Pacific Power's Chairman, Hilmer's recommendations countered those previously advanced by the organisation and Chief Executive Ross Bunyon. Bunyon's main argument for not disaggregating - that the benefits of economies of scale were only valid with a large organisation - Hilmer judged invalid. Hilmer further argued that ownership and strategic intent, not organisation size, were at the core of taking advantage

---

[32] Frederick Hilmer, G, "Review of the Structure of Electricity Generation in New South Wales: Report of the Generation Reform Working Group," NSW Treasury Office of Financial Management, http://www.treasury.nsw.gov.au/etf/etf95_8. [Accessed 11 June 2010], 8.
[33] ———, "Review of the Structure of Electricity Generation in New South Wales: Report of the Generation Reform Working Group" [Accessed 11 June 2010], 8.
[34] Bayswater and Liddell Power Stations would form the basis of Macquarie Generation. Mt Piper, Wallerawang, Vales Point and Munmorah would form the basis of First State, later Delta Electricity. Eraring Power Station would remain with Pacific Power, and would form the basis of Eraring Energy when Pacific Power was dissolved in 2002.

of international energy service opportunities.[35] In all likelihood, Bunyon's resignation as Chief Executive in June 1996 reflected the differing views he and Hilmer held on Pacific Power's role as an electricity generator and as a provider of energy services. Bunyon remained a Director and was appointed Chairman in February 1999 on the departure of Hilmer – three years after disaggregation.[36]

Pacific Power's opposition to disaggregation was evident in its 1993 and 1994 Annual Reports. These note Pacific Power's participation in the National Grid Management Council's activities to promote industry reform and to establish a national grid.[37] Competition between generators was viewed as a natural outcome of a national grid and as an incentive for performance improvements.[38] The organisation's participation in the market was envisaged as a whole generator; a generator that operates seven major base load power stations; a generator with over 40 per cent of the national grid's generation capacity.

The 1994 Annual Report is most strident in its opposition to the proposal to break up the organisation. In a question and answer format, Chief Executive Ross Bunyon, responded to standard questions on the organisation's business performance, the environment, Pacific Power's international consultancy services and his outlook for the forthcoming twelve months. He notes that, with the exception of Tasmania, average electricity prices in NSW were the lowest in Australia, profitability unsurpassed, and system reliability extremely high.[39] His most emphatic responses related to the importance of size to the organisation's commercial performance. The benefits of

---

[35] Hilmer, "Review of the Structure of Electricity Generation in New South Wales: Report of the Generation Reform Working Group" [Accessed 11 June 2010], 8. ———, "Review of the Structure of Electricity Generation in New South Wales: Report of the Generation Reform Working Group" [Accessed 11 June 2010], 8.
[36] *Pacific Power Annual Report - 1996,* 3.
[37] *Pacific Power Annual Report - 1993,* 8. *Pacific Power Annual Report - 1994,* 3.
[38] *Pacific Power Annual Report - 1993,* 9. ———, "Chairman's Report," in *Pacific Power Annual Report - 1995* (Sydney: Pacific Power, 1995), 4.
[39] *Pacific Power Annual Report - 1994,* 8.

organisational size are noted in terms of Pacific Power as a strong utility delivering excellent economic result for the NSW Government. This is contrasted with the proposed disaggregated industry's inability to deliver similar results.[40] Strength and size are portrayed as crucial to the organisation's capacity to manage its multibillion dollar debt and its ability to invest in research and new technologies. Bunyon's response to both questions presents Pacific Power as a successful organisation, one benefiting NSW and one that should not be broken up.

By 1995, this stance had changed. First, the tone of Pacific Power's comments moderated; more than likely as a consequence of Hilmer's appointment as Chairman. Industry competition was viewed in positive and accepting terms. With the transfer of the organisation's transmission assets to a separate and independent authority earlier in the year, comment on the possibility of the further breakup of the organisation is, however, notable for its absence. Rather, comment focused on the new systems and skills required to participate in a changing business environment. Overall, the organisation's response to the electricity market remained that Pacific Power should remain as a large, unified generating utility. The second change in emphasis in the 1995 Annual Report relates to the absence of any reference to the organisation's structure and, in particular, the internal business unit structure established in 1991 by Conde and Flanagan. Most, if not all, previous Annual Reports make reference to the current organisational structure, but not the 1995 report. Whether this absence is merely an editorial feature of the publication or reflects a change in organisation structure, remains to be determined.

Privatisation

From a government perspective, the sale of SOEs, such as electricity utilities, to the private sector is undertaken for several reasons. These often include continuing a micro-economic reform process; as a means of state debt reduction; or as a means of receiving a one-off injection of funds to be used to finance public infrastructure development. All three scenarios were evident in NSW in the late 1990s and beyond.

---

[40] *Pacific Power Annual Report - 1994,* 10.

The electricity utilities were not the first NSW SOEs to be considered for privatisation. In the early to mid-1990s, the NSW Government privatised a number of SOEs by either trade sale or public float. These included the Government Insurance Office for $1.26 billion; NSW Grain Corporation for $96 million and the State Bank of NSW for $527 million. [41] As impressive as these proceeds may appear, the $22.4 billion the Victorian Government gained from the sale of its electricity industry would have been a major incentive to the NSW Government to privatise its electricity supply industry.[42] With this in mind, NSW Treasurer Michael Egan's comment in May 1997 that "the market for electricity businesses is currently very strong" is not surprising.[43] Lobbying by the NSW Government to privatise the NSW industry was under way by May 1997.

Despite industry privatisation being promoted by the Premier Bob Carr and Treasurer Michael Egan, within the NSW Labor Party the privatisation debate centred on two conflicting arguments or challenges. The first was a pragmatic approach based on the financial implications of privatisation and protecting public money from unacceptable risk. While Carr and Egan had come to office with a platform of non-privatisation of the industry, a different viewpoint soon came to the fore. The non-privatisation stance began to change when Pacific Power, in the search for additional funds to expand its international energy service business, suggested a public float with a major investor taking a 30 per cent stake.[44] In the same period, the introduction of the spot trading of electricity alerted the three NSW electricity generators, Macquarie Generation, Delta

---

[41] "Privatisation in Australia," Reserve Bank of Australia, http://www.rba.gov.au/publications/bulletin/1997/dec/pdf/bu-1297-2.pdf. [Accessed 3 February 2012], 14.
[42] "Privatisation in Australia", [Accessed 3 February 2012], 9.
[43] Michael Egan: *A Plan for a Secure New South Wales: A discussion paper prepared by the Treasurer and Minister for Energy, Michael Egan, MLC for distribution to Pacific Power and Electricity Unions at the Consultative Meeting May 22 1997*, 21.
[44] Mark Skully and Duncan Craig, "Pacific Power Pushes a Public Float", *Australian Financial Review*, 5 June 1997.

Electricity and Pacific Power, to the volatility of the competitive electricity market.[45] In such an environment, Carr and Egan argued that the NSW taxpayer should not have to carry the burden of unacceptable financial risks. Unfortunately, such a scenario played out later in the decade in the Powercor swap contract disagreement.

Carr and Egan argued that if the industry and Pacific Power were to be privatised the state would benefit in several ways. All state budget debt could be eliminated, which in turn would result in an annual interest saving of approximately $500 million. This and the monies remaining from the sale would be available for new infrastructure projects and funding the Sydney 2000 Olympic Games. While subject to the same pressures as NSW to introduce market-based competition, Victoria did, however, have the additional incentive of wishing to reduce if not to eliminate the SECV's substantially larger non-current liabilities. At $7.14 billion in both 1991 and 1992, this was forty-five per cent and thirty-six per cent higher than the ECNSW's.[46] Equally, the NSW Government had demonstrated throughout the privatisation debate that it was increasingly unwilling to carry the risk to taxpayers associated with participation in the electricity market. Thus, it

---

[45] Spot Trading – Wholesale trading of electricity is via a market arrangement that instantaneously matches supply and demand in real time. On a day-before basis utilities submit bids to the Market operator to supply a quantity of electricity at a specific price and quantity electricity in five minute intervals for the next day. The next day, the market operator dispatches generators on the basis of the bid prices to meet the demand. The dispatch price in any given five minute period is the price bid by the last dispatched generator. The Spot Price is the average of the six dispatch prices in each half hour. All dispatched generators receive the Spot Price for the quantity of electricity supplied in each half hour. The buyer pays the Spot Price for the quantity of electricity used in each half hour.

[46] Evans, "The Corporatisation of a Bureaucracy: The State Electricity Commission of Victoria 1982 to 1992," 123. The SECV's debt issues largely arose from policies in the 1980s of constructing new, large coal fired power stations well before they were actually required. The Loy Yang A and B power station (commissioned from 1984 and 1992 respectively), also required a new brown coal open cut mine to fuel them. As in NSW, albeit for different reasons, excess capacity was funded by debt. This capital cost plant issue was exacerbated when this new excess capacity, with the associated operating costs, was dispatched before older plant with no or less associated debt. (Evans, "The Corporatisation of a Bureaucracy : The State Electricity Commission of Victoria 1982 to 1992," 103, 321).

is not surprising that such a risk averse attitude also extended to international commercial business opportunities.

In such a competitive environment and following the trauma of disaggregation, Pacific Power faced a number of challenges. First, in order to remain viable in a competitive electricity market, it had to unite its depleted generating and coalmining assets, manage the skills and expertise of its people, and promote its research and development potential. Second, unlike the newly formed NSW transmission and generation entities, Pacific Power had the task of winding down many of its statewide activities and services no longer required in the new business environment. [47] Writing after the 1997 privatisation debate, Chairman Fred Hilmer summed up the quandary in which Pacific Power found itself by noting that the organisation's future remained a function of its ownership.[48] The inference was that its future may not be as a public organisation. It is doubtful, however, if Pacific Power's executive contemplated the organisation's demise.

The second of Labor's privatisation dilemmas revolved around Labor Party ideology. At a pragmatic level, the Labor Party saw its role as improving the welfare of the people of NSW by improving the delivery of services and benefits while maintaining a clear differentiation from their political opponents.[49] Improved services required an injection of financial resources other than from increasing taxes – hence privatisation. Ideologically, many in the Labor movement and the public were uncomfortable with an objective of "service to the public" being transformed into one that espoused corporate profits.[50] As such, electricity was seen as an essential service and one that should remain in public ownership. Furthermore, the problems of the fragmented industry that had spawned the

---

[47] *Pacific Power Annual Report - 1998*: 9.
[48] *Pacific Power Annual Report - 1998*, 9.
[49] *A Plan for a Secure New South Wales: A discussion paper prepared by the Treasurer and Minister for Energy, Michael Egan, MLC for distribution to Pacific Power and Electricity Unions at the Consultative Meeting May 22 1997*, 1.
[50] G.L. Strachan, "The Privatisation Scam," http://bwb.com.au/gwb/news/economic/250298.html. [Accessed 20 January 2010].

Electricity Commission in 1950 was, for many, evidence that separate entities did not have the interests of the entire state in their business model. Forty-seven years of the ECNSW operating as a coordinated regional producer offered clear evidence that a single public electricity utility with a statewide focus could guarantee reliability of supply and be able to plan for expansion that extended over many years and often decades.[51]

While ideology was at the forefront of this argument, there was a degree of pragmatism among the power industry trade unions and their members. Employee numbers had been declining steadily since the late 1980s as voluntary redundancy programs were introduced as part of restructuring and commercialisation initiatives. Many employees feared that, despite a promised three-year moratorium on staff numbers, jobs would be at greater risk as privatised generators were exposed to the realities of a competitive electricity environment. Nevertheless, many unionists believed that if the industry were to be privatised, their benefits and entitlements would be better protected if a Labor government rather than a Liberal government were negotiating with prospective buyers.

In late 2010, in the lead-up to Labor Premier Keneally's successful partial privatisation of the industry, former Premier Bob Carr was scathing about Labor's previous failure to achieve full privatisation – in 1997 when he was Premier and in 2007 under his successor Morris Iemma. Carr characterised these failures as a "comedy of errors" and a "paradox

---

[51] One of the advantages of a privatised generation industry advocated by the government was that the risk associated with the provision of future generation capacity would transferred from the tax-payer to private industry. Commercial incentives would encourage private industry to plan and construct new capacity. By 2014, this was occurring, mostly in renewable technologies. However, with declining demand, a number of the major private generators are suggesting that the government should contract them to have capacity available at a specific time in the future. A capacity market, as this is referred to, is often a feature of relatively small, isolated networks, such as Western Australia's South-West-Interconnected System.

of unintended consequences."[52] For Carr, the 1997 Labor Conference and the trade unions "let [workers and their families] down badly, denying its own government the means to do even more than it was doing."[53] Blocking privatisation, Carr declared was "political idiocy."[54] Such comments are indicative of the depth of feeling and regret felt by Carr thirteen years after the events and five years after leaving office.

Pacific Power and privatisation

Pacific Power's public views on privatisation are somewhat easier to discern than the private views of the members of the Board. Even so, there appears to have been little comment on whether the organisation should be privatised or not. The general thrust of any comments senior management did make strove to highlight the organisation's skills and expertise it would have as a disaggregated non-privatised entity. New Chief Executive Peter Graham believed the organisation had matured into a provider of diversified energy services to domestic and international markets.[55] In his view, Pacific Power was the only Australian energy company with a demonstrated ability to design and construct, and if necessary operate, major coal-fired or gas-fired power stations using in-house resources.[56] Above all, there was recognition that to take advantage of the interstate and international energy services opportunities, Pacific Power had to have access to finance to take up minority equity interests in projects it was interested in.[57] Hence the request for funds from the government and the proposal for partial privatisation.

---

[52] Bob Carr, "Carr's Column - Electricity Privatisation," http://bobcarrblog.wordpress.com/2010/08/31/the-financial-review-electricity-privatisation/. [Accessed 17 May 2012].

[53] ———, "Electricity Privatisation," http://bobcarrblog.wordpress.com/2010/12/15//electricity-privatisation/. [Accessed 20 December 2014].

[54] ———, "Electricity Privatisation" [Accessed 20 December 2014].

[55]

[56] *Pacific Power Annual Report - 1997*: 6.

[57] *Pacific Power Annual Report - 1997,* 5.

Electricity reform - international comparisons

Actions to restructure, commercialise, and liberalise the Electricity Commission / Pacific Power, while part of the national development of the industry, were also part of a worldwide trend in the liberalisation of electricity industries. As noted in the previous chapter, New Zealand restructured the New Zealand Electricity Division (NZED) into the Electricity Corporation of New Zealand (ECNZ) in 1987. Labour Prime Minister David Lange and Treasurer Roger Douglas came to government in July 1984 with concerns over the extent of government debt and government spending. They expressed an economic rationalist concern with the poor efficiency and effectiveness of many government departments that was the outcome of unnecessary bureaucratic controls, unclear or conflicting departmental goals and a lack of managerial effectiveness.[58]

To address these and other issues, Lange and Douglas embarked on an economic reform program that included floating the New Zealand dollar and reforms to restructure and commercialise New Zealand's SOEs. The initiatives applied first to the NZED and later the ECNZ predated those the ECNSW/PP introduced or had imposed on it in the late 1980s and early to mid-1990s. New Zealand SOEs were to have a commercial focus; be subject to competition and managers became responsible and accountable for their part of the business.[59] As would occur with the ECNSW and Pacific Power, the task of transforming an engineering orientated organisation with a strong culture of public service into a commercial body, required significant changes. The ECNZ was restructured into a number of independent, profit centred divisions that were based on the unbundling of its major functions. Unlike Pacific Power's business units and subsequently Macquarie Generation, Delta Electricity, the newly formed ECNZ employed a significant number of non-ECNZ senior executives. These included the Chairman, Chief Executive, and the

---

[58] Barry Spicer et al., *The Power to Manage : Restructuring the New Zealand Electricity Department as a state-owned enterprise : the Electricorp experience* (Auckland, N.Z.: Oxford University Press, 1991). 12-14.

[59] ———, *The Power to Manage : Restructuring the New Zealand Electricity Department as a state-owned enterprise : the Electricorp experience*: 1.

Corporate Finance and Industrial Relations Managers.[60] In making these appointments, the New Zealand Government was perhaps mindful of Albert Einstein's observation that "the significant problems we have cannot be solved at the same level of thinking with which we created them."[61]

While the unbundling of New Zealand's ESI predated that of Pacific Power, the initial NSW wholesale electricity market (ELEX) implemented in early 1992, was modelled on the liberalised market structure and arrangements then operating in England and Wales.[62] On becoming UK Prime Minister in 1979, Margaret Thatcher had four key economic objectives – reduction in the rate of inflation; freeing up the British economy through deregulation; privatisation of SOEs and finally the reduction in the influence of trade unions.[63] In such a climate, it is not surprising that electricity was seen as a tradeable commodity and that market forces should determine its supply and price. In 1990, the Thatcher Conservative government disaggregated the CEGB into four entities – three generating companies (two conventional and one nuclear) and the National Grid Company (HV transmission and pumped storage). All generation was on a competitive basis through a wholesale electricity pool and market.[64]

---

[60] ———, *The Power to Manage : Restructuring the New Zealand Electricity Department as a state-owned enterprise : the Electricorp experience*: 37.

[61] Albert Einstein, "Quote "The significant problems we have ..."," http://www.quotationspage.com/quote/23588.html. [Accessed 14 February 2012].

[62] Trimmer, "The Identification of Decision Processes Utilised in the Establishment of a Competitive Electricity Market in New South Wales and Nationally," 33. Members of Pacific Power's market development team had visited the United Kingdom in September 1991 and concluded that that market was driving efficiency improvements at power station level.

[63] Geoffrey K. Fry, The Politics of the Thatcher Revolution An Interpretation of British Politics 1979 - 1990, (Basingstoke: Palgrave Macmillan, 2008), http://0-www.palgraveconnect.com.library.newcastle.edu.au/doifinder/10.1057/9780230594111.[accessed 14 February 2012. 74.

[64] D. Newbery, "Electricity Liberalisation in Britain: the Quest for a Satisfactory Wholesale Market Design," *Energy Journal* 26, no. European Electricity Liberalisation (2005): 2-3.

Technical and environmental issues

In the midst of the heady political discussions on disaggregation and privatisation, Pacific Power continued to generate electricity. Important as the political discussions were, they rarely directly influenced operations and maintenance activities. Nowhere is this more evident than in the setting of a world record for the longest continuous in-service operation for a large thermal generating unit in December 1996. While not a corporate goal it is indicative of the organisation's technical and engineering expertise, and for many employees at the power station concerned evidence of the pride in their technical achievement.[65] In many ways, it is also a demonstration of the camaraderie engendered when a comparatively small group of individuals strive for a goal through a collaborative technical and engineering culture and one, as in this case, often in addition to their normal work responsibilities.[66] While Pacific Power viewed this world record as a welcomed, yet unsought, demonstration of its technical expertise, its responses to the unavoidable environmental outcomes of the thermal generation of electricity process were managed from the early 1950s. The following discussion and analysis of this aspect of the organisation's activities focuses not only on the period of this chapter, but the organisation's fifty-two years.[67]

While NSW legislative concern for the environment did not emerge until the early 1960s with the NSW Clean Air Act 1961, the Electricity Commission, from its early years, was mindful of the need to manage the effect of its operations. In several locations, the Tuggerah Lakes, for example, the Electricity Commission was mindful that it

---

[65] Generating unit #4 at Eraring Power Station achieved a record of 674 days of continious in-service operation on 31 December 1996. The previous record of 604 days was held by American Electric Power's Mountineer Plant in West Virginia.

[66] Interviewee K, Personal Communication, Interview or Questionnaire with author, 6 September 2010.

[67] With NSW's reliance on black coal, the environmental issues include the release into the environment of airborne products of combustion. These are in the form of carbon dioxide (CO2), sulphur dioxide (SO2), nitrous oxide (NOX) and particulates. The release of heated water used in the steam Condensation process into rivers and lakes contributes to thermal pollution. Added to these is the impact of the unplanned release of oil or other waste products.

operated a major thermal power station on a large coastal waterway. Hence, a 1965 study into weed control in lakes used as a source of power station cooling water. It is problematic, however, if many of these early technical activities - the use of Grit Arrestors to remove Fly Ash from boiler exit gas, or a 1955 investigation into air pollution, for example, were associated with the term environmentalism. An article in an early edition of *Network*, the Electricity Commission's staff magazine, illustrates this early disconnection between technical activities and what in later years became environment awareness. The article showcases investigations to determine the flow patterns of hot water in an enclosed body of water.[68] The focus of this 1958 article was not concern for the environment; rather the radioactive isotopes specially imported from England for the investigations. These early activities were implemented either as normal engineering practices or as proactive initiatives to forestall possible future community concerns.

As with many of the individual plant systems involved in the production of electricity, the evolution of environmental protection technology was crucial. The collection of Fly Ash from boiler exit gases, for example, underwent significant technological improvements. The Electricity Commission inherited Grit Arrestor technology from its predecessors. The more efficient electrostatic precipitators were installed in power stations starting with Pyrmont 'B' in July 1952.[69] Vales Point, the Electricity Commission's first in-house designed and constructed power station continued this trend in the early 1960s. In both instances, pamphlets published to celebrate the opening of each power station focused on the engineering aspects of the technology, rather than any environmental benefits. Lack of an early awareness of the concept of environmentalism is highlighted in the Pyrmont document by reference to the fact that Fly Ash collected by

---

[68] "Projects and Generation Probe Secrets of a Cooling Pond", *Network - Official Monthly Newspaper of the N.S.W. Electricity Commission.*, Electricity Commission of New South Wales,, July 1958.

[69] It should be acknowledged that the Sydney County Council had designed and constructed Pyrmont 'B' prior to its transfer to the Electricity Commission in January 1952.

the electrostatic precipitators, in addition to Furnace Bottom Ash, was loaded in barges for disposal at sea.[70] By the 1980s, organisational awareness of environmental issues had developed to the point where references to technological changes benefiting the environment began to appear. An April 1982 article in the internal staff magazine, for example, highlighted the "smokeless power" associated with the installation of highly efficient fabric filter technology at Eraring Power Station.[71]

Early NSW environmental legislation, including the Clean Air Act 1961, identified industries that had the potential to pollute. These industries were required to obtain a licence that detailed the maximum quantity and quality of their emissions.[72] It was accepted that the electricity production process was a source of pollution. The aim then was to monitor and control what was released to the environment. During the 1970s, this was recognised as a major failing of this style of legislation. With the Clean Waters Act 1970, NSW modified this approach by requiring the planning process of new developments to include the identification and evaluation of a project's environmental impacts.[73] For the Electricity Commission, a number of features of the legislation were significant. First, state government instrumentalities were subject to the legislation. Second, the State Pollution Control Commission (SPCC) was required to conduct an Environmental Impact Assessment (EIS) of each new project. Third, the project's developer had to prepare an EIS, on which the SPCC's Assessment was based.[74]

---

[70] "Inside Pyrmont Power Station," (Sydney: Electricity Commission of New South Wales, 1961), 7.
[71] "Smokeless Power", *Network - Official Monthly Newspaper of the N.S.W. Electricity Commission.*, Electricity Commission of New South Wales,, April 1982.
[72] Brian J. Preston, "Environmental Law 1927-2007: Retrospect and Prospect," *Australian Law Journal* 81, no. 8 (2007): 622-26.
[73] _____, "Environmental Law 1927-2007: Retrospect and Prospect," 626-31.
[74] The notification that the SPCC was to conduct an environmental assessment on Eraring Power Station advised that the Electricity Commission was required to prepare an EIS that "describes the preferred scheme and alternatives, along with the probable interactions between the environment and the power station project." – *Sydney Morning Herald*, 13 October 1975, 5

Throughout the 1980s, the Electricity Commission implemented a number of initiatives in response to increasing community and political awareness of the effect of electricity generation and transmission on the environment. An environmental group was established in 1984 to audit and oversee the environmental performance of operating power stations.[75] Early audits focused on physical systems and statutory compliance while later ones were expanded to include staff awareness and management systems.[76] In 1990, an Executive Environment Committee was established to develop policy and to demonstrate executive responsibility that included allocation of the necessary resources.[77]

While the executive retained overall responsibility for environmental policy, in 1991 environmental activities were delegated to the newly created semi-autonomous business units. These included the three regional generating business units and the group responsible for the ten decommissioned power stations. Each business unit established its own Environment Committee, which prepared a five year plan that detailed the environmental issues to be managed. Paul Flanagan, Manager of the Central Environmental Service Group (1996), noted that these initiatives ensured the organisation had a comprehensive Environmental Management System.[78] Executive support, the environmental audit process and the increasing integration of environmental management into the organisation's overall business process all contributed to the organisation's environmental outcomes.

---

[75] *Annual Report for the Year Ended 30th June 1984,* 48.
[76] Paul Flanagan, "Pacific Power," in *Effective Environmental Management: Principles and Case Studies*, ed. Rory Sullivan and Hugh Wyndham (Crows Nest, N.S.W.: Allen & Unwin, 2001), 177-80.
[77] *Annual Report for the Year Ended 30th June 1990,* 53.
[78] ———, "Pacific Power" 177-90.

Not surprisingly, this commitment could suggest that ECNSW and Pacific Power management viewed their efforts in a positive light.[79] Nevertheless, such an opinion does not imply that the organisation did not pollute the environment, either by design within the legislation or by accident. Emissions from power station chimneys, while of concern to some people, were in the main within legislative guidelines. Nonetheless, for residents of inner Sydney in the early 1980s, emissions from the then rarely used Pyrmont and White Bay power stations during the power shortages brought on by the drought and Liddell generator failures, were of concern.[80] In May 1981, the *Sydney Morning Herald* reported that Pyrmont's chimneys were "belching forth." This is despite senior ECNSW management noting the efficiency of the electrostatic precipitators (dust collectors) at Pyrmont having increased significantly over the previous ten to fifteen years.[81] Some residents were also not "comforted by the knowledge that the [station's output] barely contributed to overall power requirements."[82] Both the ECNSW and SPCC were accused of "avoiding the question of the effects of this pollution on the health of those who live and work in the inner city." The SPCC went so far as to acknowledge, "local residents can expect greater levels of soot fallout than usual" from Pyrmont and White Bay.[83] Operationally, the ECNSW predicted emissions would be further reduced by distributing Pyrmont's reduced output requirement over three or four generating units. Their final comment that emissions from Pyrmont were "inconvenient but not dangerous" while

---

[79] *Annual Reports of the Electricity Commission of New South Wales / Pacific Power.* Flanagan, "Pacific Power". Interviewee F, Personal Communication, Interview or Questionnaire with author, 4 December 2011.

[80] The lower than normal water levels in the catchments of the Snowy Mountains Hydro-electric Authority meant that the ECNSW couid not rely on this source of power to bolster its requirements. This situation was greatly exhaserbated during the loss of three 500 MW Liddell generators.

[81] Public Relations Office, *Operation of Pyrmont Power station* (Electricity Commission of New South Wales, 1980). 2. "No Winter Blackouts", *Sydney Morning Herald*, 12 May 1981.

[82] Geoff Stevens, "Letter to the Editor", *Sydney Morning Herald*, 27 May 1981.

[83] Sue Johnson, "Power to the people to mean soot for some", *Sydney Morning Herald*, 30 June 1981.

supposedly technically accurate (for that period), were nevertheless insensitive to community concern."[84] Infringements of the legislation, while not common, did occur. The release of 50,000 litres of diesel fuel into Lake Liddell in 1991 for example, while accidental, nevertheless breached relevant legislation.[85]

Closely aligned with the ECNSW's traditional environmental concerns for air and water quality, the organisation also had to be mindful of the legislative requirements regarding the cultural and industrial heritage significance of their buildings, moveable objects and work places.[86] In a broad sense, this legislation aimed to foster the community's understanding of the past in terms of the environment, objects and places.[87] In addition it encouraged identification, conservation and if required the interim protection of items of state heritage significance. To meet their legislative requirements, the ECNSW, as did many other organisations, implemented the relevant guidelines outlined in the 1979, and later versions, of the *Burra Charter*. This *Charter* encompasses guidelines for the principles and procedures to be applied in the conservation of important places, including those considered to be of engineering and industrial importance.[88] For the ECNSW, many of its older power stations - those that were no longer, or soon to cease operating – were considered to fall under the legislation.

Of the *Charter's* three broad procedural guidelines, understanding significance, develop a policy and manage the conservation of an item, the ECNSW implemented the first for eight of its power stations – Ultimo, White Bay, Balmain, Pyrmont, Bunnerong

---

[84] Public Relations Office, "Operation of Pyrmont Power station," 2.

[85] "Elcom guilty of Liddell spill", *Canberra Times*, 12 October 1991.

[86] *Heritage Act 1977 No 136*.

[87] "Culture and Heritage," New South Wales Office of Environment & Heritage, http://www.environment.nsw.gov.au/cultureandheritage.htm. [Accessed 30 June 2015].

[88] Meredith Walker et al., *The illustrated Burra Charter: good practice for heritage places*, Exp. and updated ed. (Burwood, Vic.: Australia ICOMOS, 2004). 7.

Switch House, Wangi and Penrith. [89] The recommendations of the subsequent heritage reports are varied, and range from the retention of heritage buildings and a representative 'slice' of generation equipment (White Bay); adaptive reuse as a means of conserving the buildings and grounds (Wangi, Ultimo, Pyrmont 'A' Admin Building, Bunnerong Switch house and Penrith), to not recommended for conservation (Pyrmont 'B', Balmain, and Vales Point 'A'). Apart from White Bay, the generation plant and equipment of the remaining old power stations have been, or are in the process of being, removed. The shell of Wangi's main building is awaiting its owner's decisions on its future. Ultimo is currently the site of Sydney's Power House Museum, Penrith houses the Museum of Fire and the office complex of Sydney's Star Casino is fronted by Pyrmont's administration building.

---

[89] C. Doring and MJ Doring, *Wangi Power Station: An account of the construction, commissioning and operation of Wangi Power Station at Wangi Wangi, on Lake macquarie, New South Wales, together with an assessment of its heritage significance and recommendations concerning the responsibilities of its owner under the New South Wales Heritage Act 1977.* (Sydney: C and MJ Doring Pty Ltd, 1990); ———, *Vales Point A Power Station Heritage Study 1959 to 1989: An account of the construction, commissioning and operation of Vales Point 'A' Power Station at Vales Point, on Lake macquarie, New South Wales, together with an assessment of its heritage significance.* (Sydney: C and MJ Doring Pty Ltd, 1992); ———, *Bunnerong Switch House Heritage Assessment: An account of the history and a description of the swith house of the former Bunnerong Power Station at Military Road, Matraville, in the City of Randwick together with an assessment of its heritage significance* (Sydney: C and MJ Doring Pty Ltd, 1993); "Former Pyrmont Power Station Administration Building," New South Wales Office of Environment6 & Heritage, http://www.environment.nsw.gov.au/heritageapp/ViewHeritageItemDetails.aspx?ID=2424796. [Accessed 20 January 2015]. Godden et al., *The history and technology of the Ultimo Power House Sydney: a report for the Government Architects Branch, Public Works Department of New South Wales*. Godden, "The Significance of White Bay and Balmain Power Stations to Sydney's industrial heritage: a report to the Electricity Commission of NSW. ." Design 5 Architects Pty Ltd, *White Bay Power Station: conservation management plan.* , vol. 1 to 5 (Sydney2011). "What is Engineering Heritage," Engineers Australia, http://www.engineersaustralia.org.au/engineering-heritage-australia/about-us#What%20Is. [Accessed 17 June 2015]. Don Godden, and Associates, *Penrith Power Station: History, Operation and Significance: A report for the Museum of Fire and Penrith City Council* (Sydney: Museum of Fire and Penrith City Council, 1986).

Conclusion

While the administrative and cultural changes implemented between 1988 and 1992 were acceptable to Pacific Power's senior management team, the liberalisation of the industry and the structural changes implemented in the lead-up to the NEM were actively opposed and then acquiesced to. The crux of industry liberalisation as far as Pacific Power was concerned involved a fundamental difference of opinion in how the production of electricity should be managed. Advocates of a liberalised industry objected to reliability of supply being Pacific Power's sole performance criterion. This criterion did not necessarily take into account the cost of that service, the efficiency of its production or the management of the process. Despite Pacific Power having achieved considerable improvements in production efficiencies during the late 1980s and early 1990s, these meant little to a State Government focused on fundamental reform to the industry.

The lack of enthusiasm that Pacific Power and Chairman Ross Bunyon had for the breakup of the organisation in many ways mirrors the lack of enthusiasm shown in the late 1940s by the SCC for its breakup. The Council opposed the separation of its generation and HV transmission assets to form part of the Electricity Commission on the basis of self-interest and a suspicion of what was referred to as the government's socialist policies. In both instances, the state's largest electricity generator opposed disaggregation. Both organisations were politically very powerful and had vocally opposed such actions. However, for the SCC and Pacific Power, the tide of events overtook their self-interest or status quo opinions. In the earlier instance, opposition was expressed in an environment of devastating power restrictions and blackouts. In the latter, it was in the context of the development of a national electricity market. It is perhaps ironic that the ECNSW or its successor Pacific Power were involved in both instances. The labour pains leading to the organisation's birth are juxtaposed against the beginning of the organisation's decline that eventually progressed to its demise.

Over and above any opposition to either the consolidation of 1950 or the separation in 1995 and 1996, two fundamental aspects of the industry in each period are crucial. First,

coordination of the industry was largely absent before 1950. As a generating and distribution authority, the SCC, for example, was focused on its franchised area to the virtual exclusion of the remainder of the state. With the separation of the ownership of generation from that of distribution in 1950, the ECNSW and four decades later, Pacific Power, Macquarie Generation and Delta Electricity, were only concerned with supplying electricity into a common interconnected HV network. In this sense, disaggregation in 1995 and 1996 did not encompass the same degree of radical change in the technical operation of the industry as had occurred in 1950. In the latter period, appropriate legislation and a centralised independent market operator coordinated operation of the generation and transmission industry. Equally important in 1996, the focus of the HV transmission network was at a statewide level, as it had been since 1950 and not the separate franchised areas that characterise the pre-1950 industry.

Commissioning two 660 MW generating units at Mt Piper in 1993 and 1994, completed Pacific Power's program to add 7,920 MW new generating capacity to the NSW ESI that been commenced in the late 1970s and early 1980s. With the closure of uneconomic plant, this equated to a net sixty-eight per cent increase in base load generating capacity. This construction boom had been in response to the ECNSW's forecast of high demand growth throughout the 1980s and beyond.[90] Yet, by the mid-decade, this forecast had been drastically revised down, with generation overcapacity being the result. The world-class speed of each commissioning program of these large generating units is evidence of the quality of plant and equipment, and equally, the high level of technical expertise of the organisation and its employees. Accordingly, Gavin McDonnell's 2004 comment that ECNSW/PP was technically advanced was a fair

[90] Decisions to standardise on 660 MW generating units were based on multiple factors. At the time of tender acceptance, in the mid-1970s (Vales Point B), and late-1970s early 1980s (Eraring, Bayswater and Mt Piper), economies of scale, system stability and the relative MW size of each unit to the overall MW capacity of the NSW grid, the forecast annual increases in demand, would have been some of the factors influencing decision makers.

characterisation.[91] However, while his description that the organisation was politically powerful may have been correct during its early decades, by the mid-1990s its influence had declined significantly. Its opposition to disaggregation slowed but did not prevent the eventual separation of Pacific Power's HV network into TransGrid in February 1995. With a change of government in April 1995, Pacific Power was equally unsuccessful in its efforts to prevent disaggregation of its generation portfolio in March 1996.

Disaggregation of Pacific Power's HV transmission network in February 1995 and its generation portfolio in March 1996 ended the period of centralised ownership of NSW generation. After four and a half decades as a coordinated regional system, the NSW industry was transformed into a coordinated disaggregated regional system. While the NSW and Victorian networks had been interconnected since the mid-1950s, transition to the current arrangement (2015) as a coordinated disaggregated interconnected interregional system would occur with the formal start of the NEM in 1998.

---

[91] McDonell, "N.S.W. Government Ownership and Risk Management in a Mandatory Pool - 'Neither Fish nor Fowl nor ...'" 79.

Chapter 9 Dissolution (1998-2003)

Introduction

Through the mid-1990s and into the new century, many people with an interest in the NSW electricity generation industry could be forgiven for deploring the disaggregation and eventual demise of the state's principal electricity generator. For those with direct industry association dating back to the late 1940s and early 1950s, it perhaps seemed the industry had turned full circle. The three public and one private generating authorities of the 1940s were replaced by a centralised body in 1950, to be replaced in 1995 and 1996 and 2000 by three public generators and a public high voltage transmission authority.

This chapter explores the final years of Pacific Power as it navigated the complexities of trading in a competitive electricity market, and attempted to convince the NSW Government that it had a future as a provider of energy services. The major themes discussed include Pacific Power's torrid experiences in the early years of the NEM, and its path to eventual dissolution.

The chapter concludes, first, that despite Gavin McDonell's 2004 comment describing Pacific Power as a "politically powerful" organisation, in its final years it had little success in influencing government policies that eventually resulted in its demise.[1] Second, the ramification of losing the Powercor electricity contract court case, while potentially financially damaging, confirmed the government's opinion that trading in a competitive electricity market posed a risk to taxpayers' money.[2] Third, the transfer of the remaining portions of its generation portfolio to Eraring Energy in August 2000 ended Pacific Power's role as an electricity generator, and highlighted the demise of the organisation that once dominated the NSW electricity generation industry.

---

[1] ———, "N.S.W. Government Ownership and Risk Management in a Mandatory Pool - 'Neither Fish nor Fowl nor ...'" 79.

[2] Powercor Australia is a Victorian electricity retailer.

Industry structure

The years 1998-2003 continued the period in which the NSW electricity generation industry operated as three major state owned generators and a transmission authority. These large public coal-fired thermal generators were increasingly augmented by public and private renewable generation and private combined cycle gas turbine technologies.

Structurally the NSW electricity generation sector continued to be dominated by the three publicly owned utilities – Macquarie Generation, Delta Electricity and Pacific Power. The 1995/1996 industry structure of three major generators, supplying publicly owned distributors and retailers through a separate publicly owned HV transmission network, as illustrated in Figure 9.1, remained until late 2010.

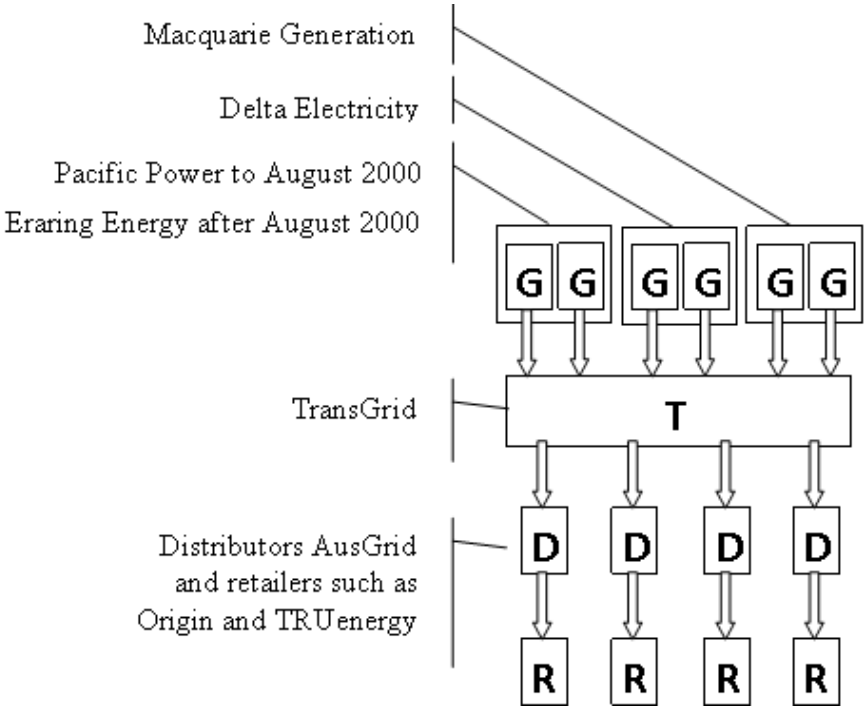

Figure 9.1 NSW ESI. March 1996-December 2010

A National Electricity Market

As noted above, Pacific Power's three generating business units began operating in an internal wholesale electricity market (ELEX) in 1992. Following disaggregation in May 1996, Macquarie Generation, Delta Electricity and Pacific Power, and NSW retailers began trading through the SEM. This arrangement was expanded in February 1997 to

include Victorian based retailers trading in NSW.[3] Pacific Power began trading in the Victorian market, via the NEM in May 1997.

The initiatives to establish a national electricity market in the 1990s were not the first to establish an electricity supply network covering south-east Australia. In April 1980, then Prime Minister Malcolm Fraser established a committee of inquiry to determine the practicality of establishing a strongly integrated south-east Australia electricity grid.[4] The arrangement was envisaged to cover NSW, Victoria, South Australia and Tasmania. For the purpose of this inquiry, Queensland was not considered. The NSW representative was Frank Brady, the Chairman of the ECNSW. After eighteen months, this essentially engineering orientated Committee recommended that there was no financial justification at that time for establishing a strongly integrated electricity grid across the four states. In addition, the Committee recommended that limited interconnections should be established with South Australia, but none with Tasmania. By May 1991, a new inquiry conducted by the Industry Commission, focused on the benefits that increased industry competition would bring by way of improved efficiencies in generation, transmission and distribution. Specifically, the Industry Commission noted that "rather than having a separate transmission body in each state, transmission responsibility [should be] consolidated in the one body."[5] This paved the way for the National Electricity Market.

As noted in the previous chapter, the southeast Australian wholesale electricity market is on based two principal processes, the physical flow of electricity and the flow of money. Figure 9.2 presents a basic outline of the physical flow of electricity from generator to HV transmission network, retailer's distribution network to consumer, and the flow of money in the reverse direction.

---

[3] Rann, "Electricity Industry Restructuring - A Chronology" [Accessed 29 January 2014], http://www.aph.gov.au/About_Parliament/Parliamentary_Departments/Parliamentary_Library/Publications_Archive/Background_Papers/bp9798/98bp21#NEW. [Accessed 29 January 2014].

[4] *Committee of Inquiry into Electricity Generation and the Sharing of Power Resources in South-East Australia: executive summary*, (Canberra: Australian Government Publishing Service, 1981). 11-12.

[5] Industry Commission, *Energy Generation and Distribution*, 18.

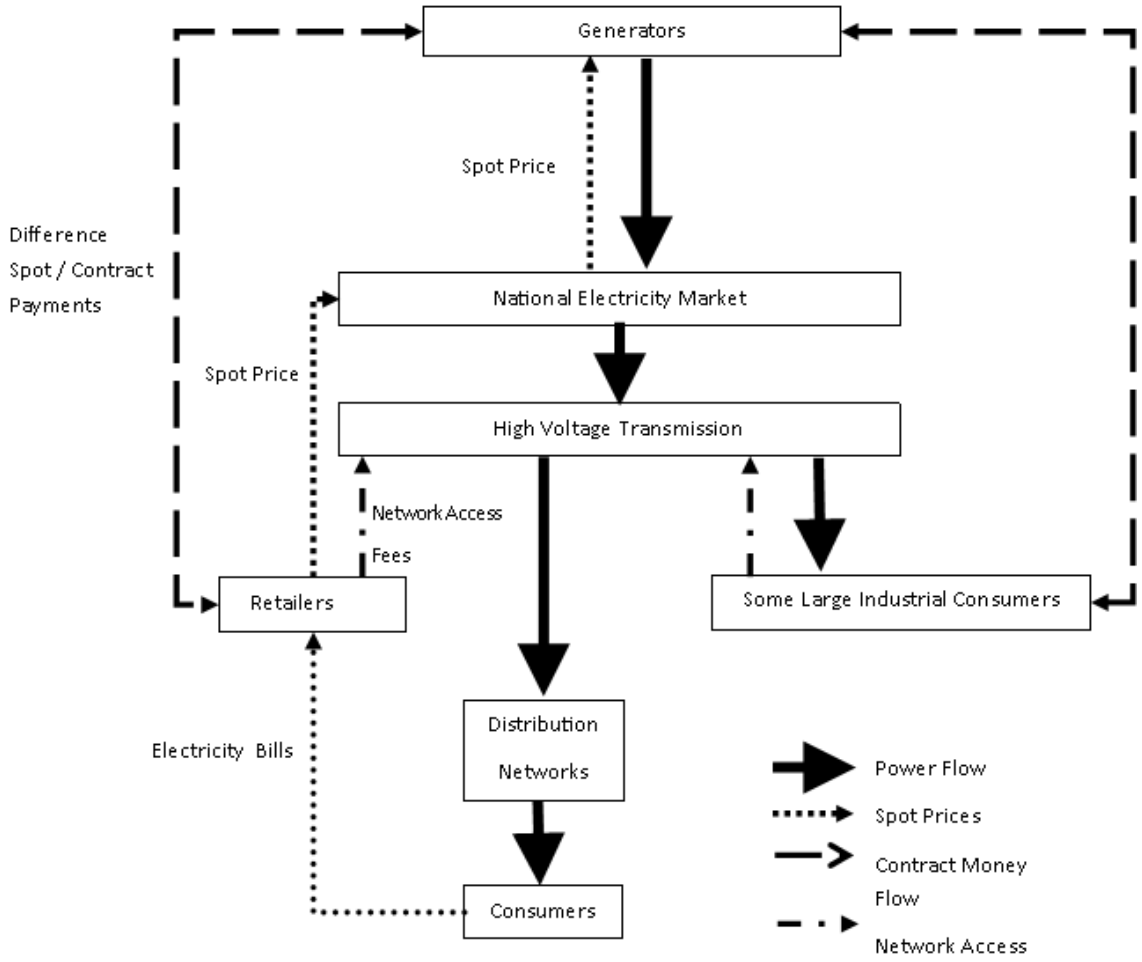

Figure 9.2 Basic power and money flows - pre-December 2010
Source: Adapted by the author after: "How Are Electricity Prices Set in Australia?"[6]

While the arrangement of power flow is straightforward, a number of financial aspects of this arrangement are worth noting. Retailers pay the NEM operator the Spot Price for the electricity taken from the electricity pool and distributed to consumers.[7] The NEM operator then pays the generator the Spot Price for the electricity traded. While many retailers owned their low voltage (LV) distribution network, they nevertheless had to pay a network access fee to the operator of the HV transmission network. Generators also bid

[6] "How Are Electricity Prices Set in Australia?," Reserve Bank of Australia, http://www.rba.gov.au/foi/disclosure-log/pdf/101115.pdf. [Accessed 28 April 2012].
[7] A basic definition of Spot Price determination is provided in the previous chapter.

to supply ancillary services required by the market operator to maintain secure and reliable network operations.[8] To alleviate the risks associated with the volatility of Spot Prices most, if not all generating utilities, and retailers entered into financial swap contracts. Participants usually covered a high percentage of their generation / load, however, the vagaries of weather and unforeseen circumstances precluded full coverage. These purely financial arrangements operated in parallel with the NEM, and augmented the volatile spot market with a fixed price for the volume contracted. Similarly, single large industrial consumers, such as individual aluminium smelters in the Hunter Valley, also had fixed price contracts for the supply of electricity with specific generating utilities.

The overriding characteristic of the NEM for generating utilities, such as Pacific Power, was that the Spot Price of electricity is determined by market supply and demand rather than set by a tariff. As electricity cannot be easily or economically stored, the availability of large quantities of electricity is subject to immediate and short-term factors. These factors are important inputs into the market's operation and the subsequent price and volume variability. For generators the risks associated with this variability are the Spot Price being less than the cost of production, or not being able to supply a contracted quantity of electricity. The conditions that lead to low Spot Prices vary, however, as with any market, a low price is often indicative of supply greatly exceeding demand, or a supplier offering to sell their product at a very low price. In the latter scenario both NSW and Victoria, because of decisions made in the 1980s, continued to have generation overcapacity, which they were anxious to utilise. In mid-1999, Pacific Power's CEO Ross Bunyon was critical of Victorian generators bidding into the market below their cost of production.[9] Generating utilities occasionally used this strategy to ensure that their plant was dispatched (allowed to supply the grid) and could reap the benefits of the Spot Price set by a higher bidder. The main risk with such a strategy is that

---

[8] Ancillary Services include Frequency Control, Voltage Control, Network Loading Control and System Restart Capability.

[9] Ross Bunyon, "The Real Story on Power Plays", *Australian Financial Review*, 16 June 1999.

if low bidders met a significant percentage of electricity required by the market in a specific period and higher bidders were not dispatched, lower than normal prices per MWh resulted. As the findings of the Pacific Power vs Powercor court case illustrate (discussed later in this chapter), Pacific Power at this time also offered power at below production cost. On the other hand, volume risks for generators generally equated to not being able to supply the quantity of electricity bid into the market. Generator failure or transmission line constraints are two technical circumstances that could lead to volume risks and subsequent high Spot Price risks. The potential volume risks by over-committing its generation capacity were the crux of Pacific Power's defence in litigation instigated by Victorian retailer Powercor in 1999.

The following examples of Spot Prices from the early months of the competitive electricity market illustrate the volatility that was often a windfall to one party and a misfortune for the other.[10] In the 1998/1999 financial year, the volume weighted average Spot Price in NSW was $25.56/MWh with a maximum of $3037.97/MWh and minimum of $4.46/MWh.[11] During the same period, the corresponding Victorian Spot Prices were $26.02/MWh, $3653.28/MWh and $0.00 (zero) /MWh respectively. Admittedly, the extremes were for relatively short periods; nonetheless, they had an impact on an organisation's financial performance. For Pacific Power, average Spot Prices in the low $20s were below the long-term cost of production, hence the significance of periods of higher Spot Prices. While spikes of high Spot Prices were a windfall for generators, periods of very low prices only exacerbated the adverse effects of long-term prices below the cost of production.

Sole reliance on the vagaries of volatile spot electricity prices meant that generators and retailers would have difficulty conducting a successful long-term business. Both

---

[10] The prime characterstic of a Spot Price Market is that the commodity being traded is for immediate delivery.

[11] The average Spot Price is weighted against demand (volume) for electricity. https://www.aer.gov.au/node/9756 [Accessed 13 August 2014].

resorted to swap contracts to achieve price stability. For a generator a contract-for-difference or swap contract arrangement means that it will supply electricity at an agreed price and volume at a designated time in the future. Similarly, the retailer agrees to buy the set volume of electricity at an agreed price on the nominated date. These contracts are external to the NEM. Part of the complexity of swap contracts lies in the fact that the final exchange of monies is dependent on the Spot Price on the nominated day. Under the terms of the swap contract, as Figure 9.3 illustrates, balancing payments ensures the buyer ultimately pays the contract price and the supplier receives the contract price. When the Spot Price is below the contract price, the buyer compensates the supplier for the difference, and vice versa when the Spot Price is above the contract price.[12]

[12] In the south-east Australian National Electricity Market economic conditions determine when new generating capacity is added to the market. These same economic forces will also determine when old, less efficient capacity is removed. The NSW Department of Trade and Investment, in 2014, reported that the state had 16,962 MW of existing capacity greater than 30 MW, which includes NSWs' share of the Snowy Hydro capacity. In addition, projects totalling 5,205 MW of new capacity in the planning system, and 13,058 MW of new capacity in projects with development approval. Smaller networks, Western Australia's South West Interconnected System, for example, rather than relying on market forces to trigger development opt for a mechanism that rewards generation providers for providing future capacity. ("Electricity Generation [NSW]," NSW Department of Trade and Investment, http://www.energy.nsw.gov.au/electricity/generation#Major-existing-NSW-power-stations. [Accessed 28 September 2014]. "WEM [Wholesale Electricity Market] Structure," Independent Market Operator, http://www.imowa.com.au/electricity-and-gas-services/market-structure. [Accessed 12 October 2014].)

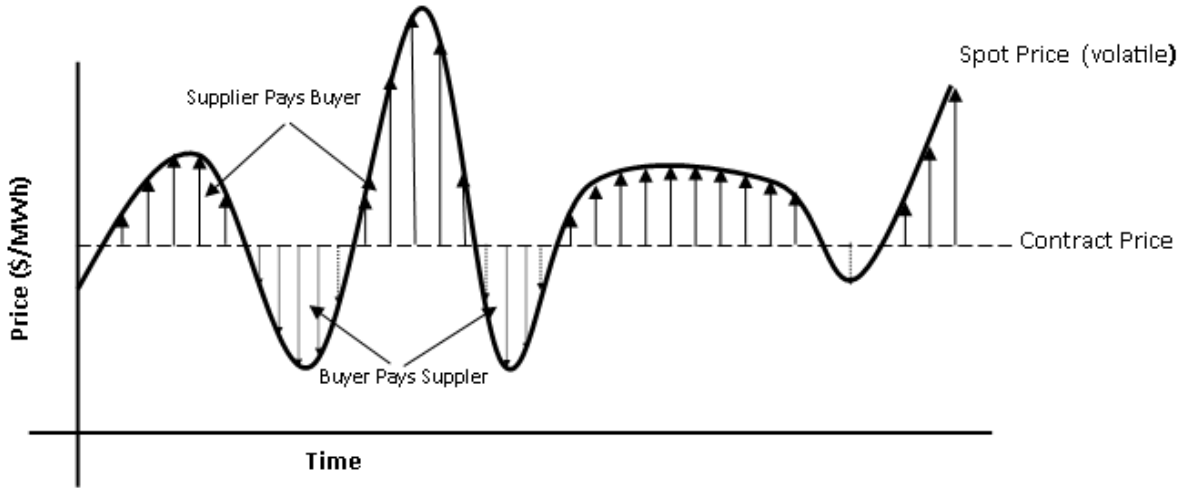

Figure 9.3 Swap contracts

Pacific Power v Powercor Australia: Electricity trading irregularities

The foregoing discussion on the electrical and financial relationship between electricity supplier and retailer is important for an appreciation of the complexities of the 1999 litigation instigated by Victorian retailer Powercor in response to Pacific Power's attempt to cancel eleven swap contracts. The outcome of this litigation was seen by electricity market participants as crucial to the ongoing successful operation of the market itself and the parallel financial electricity contracts market. For Pacific Power and the NSW Government the adverse outcome of the litigation had the potential to cost many millions of dollars. In the context of NSW industry's future, the adverse outcome only reinforced the NSW Government's preference for privatisation and sowed the seeds of government disquiet with Pacific Power's performance.

Pacific Power's first swap contracts with Victorian electricity retailer Powercor had been established in October and November 1996.[13] By mid-June 1998, forty-seven

[13] Powercor Aust. Ltd. V Pacific Power, VSC 110 (1999), Supreme Court of Victoria (Commercial Jurisdiction). http://www.worldlii.org/au/cases/vic/VSC/1999/110.html. [Accessed 17 April 2012] 39.

contracts had been established between the two parties.[14] In May 1998, Pacific Power became aware that current and future contracts with Powercor and other parties, if carried out, would result in the organisation exceeding its self-imposed eighty-five per cent limit on the volume of its production assigned to swap contracts. In an attempt to correct this, Pacific Power's energy trader assigned to manage the Powercor contracts advised the retailer that it was disputing the validity of eleven contracts established between November 1997 and June 1998, some of which had already commenced.[15] These contracts were for over 4,400 GWh of energy, with the final contract expiring in 2007. Pacific Power's basis for disputing the validity of these eleven contracts centred on its view that their own and Powercor's energy traders did not have the authority to approve these contracts. They also contended a contract was not binding until confirmation agreements had been signed and exchanged. In the subsequent court case before the Commercial Jurisdiction of the Supreme Court of Victoria in 1999, Pacific Power was ordered to carry out its obligations with regard to the eleven disputed contracts.[16] In addition, it had to pay Powercor $44.7 million in damages, as well as Powercor's $3.5 million legal costs.

Fallout from Pacific Power versus Powercor

The court's ruling fuelled speculation in the media and the NSW Parliament about the final cost to the state of Pacific Power's apparent energy trading misfortunes. The Deputy Leader of the NSW Opposition suggested that the final cost to taxpayers could be between $600 million and $1 billion.[17] This allegation is misleading as the figures quoted

---

[14] Charles Birch and Tresna Tunbridge, "Powercor Australia Limited v. Pacific Power - The Case and Its Implications for Organisations Engaged in Energy Trading," *Australian Mining & Petroleum Law Journal* 19, no. 2 (2000): 2.

[15] Interviewee I, Personal Communication, Interview or Questionnaire with author, 21 January 2014.

[16] Birch and Tunbridge, "Powercor Australia Limited v. Pacific Power - The Case and Its Implications for Organisations Engaged in Energy Trading," 2.

[17] New South Wales, *Parliamentary Debates*, "Pacific Power and Powercor Out of Court Settlement," Legislative Council, 6 September 2000, 8674 (D.J. Gay, Deputy Leader of the Opposition).

are the face value of the contracts and not the end of contract settlement amounts. NSW Treasurer Michael Egan, in a more measured comment, noted that Pacific Power, under the terms of the swap contracts, would receive the contract price, in excess of $600 million over ten years, for electricity supplied to Powercor.[18] He did make the observation, however, that the final balancing of monies via the swap contracts was dependent on the Spot Price on the day of supply, the time of day and the volume of electricity traded.

In contrast to the 1999 / 2000 speculation of the final cost of the Powercor contracts, in 2012, after all Powercor contracts had expired, a senior NSW industry manager, perhaps with a degree of partisanship and hindsight, commented that all the Powercor contracts had been profitable in that revenue had exceeded costs.[19] This comment is interpreted to imply the revenue received from Powercor exceeded the production costs of the electricity supplied. Commercial-in-Confidence conditions imposed by Pacific Power and later Eraring Energy makes it difficult to judge the veracity of these comments, and more importantly, the extent of monies exchanged because of changes in the Spot Price.[20] Nevertheless, given the long duration of some of the contracts, and the interregional price risks that arose with the implementation of the NEM, Pacific Power may have struck deals that in later years could have been more advantageous.[21] Even so, both Pacific

---

[18] New South Wales, *Parliamentary Debates*, "Pacific Power and Powercor Out of Court Settlement," Legislative Council, 6 September 2000, 8674 (Egan, Treasurer).

[19] Interviewee G, Personal Communication, Interview or Questionnaire with author, 3 May 2012.

[20] As Pacific Power's legal successor, Eraring Energy acquired the the Powercor contracts and the associated liabilities.

[21] The National Electricity Market is made up of five interconnected regions. (NSW, Victoria, South Australia, Tasmania and Queensland). Each region has a Regional Reference Node (RRN) at which the region's Regional Reference Price (RRP) is set. NSW's Regional Reference Node is located at Sydney West 330 kV substation, and Victoria's at Thomastown 220 kV substation. Under normal circumstances, when interconnector flows between regions are not constrained then the two RRPs are similar. However, under abnormal conditions the interconnector flow may be constrained and result in the RRPs diverging. A generator in one region who is the seller of a Swap or hedge contract in another region is thus at risk of only being paid the spot price of his

Power and Eraring Energy implemented trading strategies to mitigate this interregional exposure.[22] These included switching their Hume Power Station, a hydro station located on the Murray River, into the Victorian regional market and entering into a number of contracts with Victorian generators or retailers. Finally, the earlier speculation on the ultimate cost of the Powercor contracts failed to recognise that revenue received from each Powercor contract moved in line with the Consumer Price Index. Consequently, during the latter part of the ten-year contracts, when Spot Prices were flat or reducing, returns from the Powercor contracts were increasing.[23]

McDonell's 2004 comment that the Electricity Commission and Pacific Power had been "technically advanced" arguably implies a high level of engineering excellence. [24] To an external observer, even one as well informed as McDonell no doubt was, such observations are understandable. In contrast, a less flattering picture of the day-to-day operations of a crucial part of Pacific Power's operations was presented during the court case. Pacific Power's defence, centred in part, on the energy traders negotiating the contracts not having delegated authority and the contracts requiring the approval of the Board or, in some cases, the Chairman or General Manager Development. To some extent, these assertions were countered by evidence the negotiating procedure followed for the eleven disputed contracts did not differ significantly from over twenty previously negotiated undisputed contracts. Further, Pacific Power's insistence that a contract was not valid until confirmation letters had been signed and exchanged was in contrast to instances in which contracts had begun to be honoured before letters were exchanged.

At the centre of the Pacific Power energy trading process at the time was a lack of robust and transparent procedures. An ad hoc system of record keeping relied heavily on

---

home region yet having to settle the contract for differences in the other region at the potentially very high spot price of the other region.

[22] Interviewee G, Personal Communication, Interview or Questionnaire with author, 3 May 2012.

[23] ———, Personal Communication, Interview or Questionnaire with author, 3 May 2012.

[24] McDonell, "N.S.W. Government Ownership and Risk Management in a Mandatory Pool - 'Neither Fish nor Fowl nor ...'" 79.

the memory and face-to-face communication of energy traders.[25] Pacific Power's energy traders' systematic lack of detailed record keeping was in contrast to Powercor's energy traders' consistent practice of documenting conversations and meetings. The prospect of Pacific Power exceeding its eighty-five per cent limit on swap contract exposure was only highlighted through an individual energy trader's personal knowledge. This underlined the lack of a documented summary of swap contract offers and acceptances available to those conducting trading negotiations. It can also be argued that this laxness extended to senior management and Pacific Power's executive as they had ultimate responsibility to establish trading limits and reviews.

Public discussion on the Powercor issue was robust and canvassed in the media, parliamentary debates, by the Auditor General and through a small number of articles by law or accounting practices.[26] Comments by Pacific Power itself appear limited to those by Chairman Ross Bunyon. This more than likely was a deliberate corporate policy. Pacific Power Annual Reports, or the in-house staff magazine *Network* make no specific reference to the Powercor case. Numerous general comments on the NEM, its initial operation and volatility, are the only references to the trading environment in which the Powercor issue arose. Financial profits or losses arising from individual contracts with Powercor or other organisations are not detailed in annual Profit and Loss Statements or Cash Flow Statements. Commenting in his Outgoing Chairman's report in Pacific Power's 2000 Annual Report, Ross Bunyon perhaps best encapsulates the organisation's

---

[25] Powercor Aust. Ltd. V Pacific Power. http://www.worldlii.org/au/cases/vic/VSC/1999/110.html. [Accessed 17 April 2012] 179-86.

[26] Mark Skulley, "Powercor Takes Battle to Court", *Australian Financial Review*, 25 August 1998. Martin McEniery, "Powercor Australia v Pacific Power," Gardens Lawyers, www.gadens.com.au/Publications-View.aspx?documentid=373. [Accessed 21 February 2011]; New South Wales, *Parliamentary Debates*, "Pacific Power and Powercor Out of Court Settlement," Legislative Council, 6 September 2000, (Gay, Deputy Leader of the Opposition); New South Wales, *Parliamentary Debates*, "Pacific Power and Powercor Out of Court Settlement," Legislative Council, 6 September 2000, (Egan, Treasurer); Birch and Tunbridge, "Powercor Australia Limited v. Pacific Power - The Case and Its Implications for Organisations Engaged in Energy Trading." *Review of Pacific Power's Electricity Trading Activities*: 6, 2000.

view of the financial year to June 2000. It was, he believed, a "watershed [year that] borders on understatement."[27] He comments on the return to operational profitability, the 50th anniversary of the organisation, and the mixed emotions surrounding the impending transfer of the organisation's generation portfolio and employees to Eraring Energy – but no mention of Powercor.

Public Servants – power without credit

A final comment on the Powercor issue relates to the legal and media publicity on the character of the Pacific Power energy trader at the centre of the matter. Apart from public references by Electricity Commission or Pacific Power Chairpersons, public references to specific employees and their employment activities, are rare. In October 1973, two union members at the heart of the campaign for a thirty-five hour working week campaign were named in the media.[28] One of these, a Power Plant Operator at Munmorah Power Station, assumed part management of the generator dispatch process normally carried out by the Electricity Commission's System Control Division. In the Powercor case, the presiding judge criticised by name the Pacific Power energy trader as often being "careless in performing his duties" and as a witness "prone to guess."[29] A number of media reports named the individual. The *Daily Telegraph*, in naming him, characterised him as "the trader who left NSW with a $600 million power bill."[30] The *Sydney Morning Herald*, while also naming the employee, presents a more conciliatory picture. The employee is depicted as a "dedicated public servant" of twenty years who following his voluntary departure from Pacific Power, "spends his days at home" and does not return phone calls.[31] To Pacific Power's credit, the energy trader was not dismissed; he resigned.

---

[27] Ross Bunyon: *Pacific Power Annual Report - 2000*, 4.
[28] Fred Wells, "Unions Meet", *Sydney Morning Herald*, 4 October 1973.
[29] Powercor Aust. Ltd. V Pacific Power. http://www.worldlii.org/au/cases/vic/VSC/1999/110.html. [Accessed 17 April 2012] 186-87.
[30] David Luff, "The Trader Who Left NSW with a $600M Power Bill", *Daily Telegraph*, 25 November 1999.
[31] Ian Verrender, "Power Play", *Sydney Morning Herald*, 2 September 2000.

Chairman Ross Bunyon is reported to have commented that "in all conscience I couldn't (fire him) because on my reading of the case he was merely doing his job."[32] However, as Bunyon's observation tends to suggest, the energy trader, in carrying out his job, was guided by poor policies and procedures devised and implemented by managers in a more senior position. It also highlights Pacific Power's poor understanding of the operation of competitive electricity market operating across interregional boundaries.

In many respects, the publicity afforded this person is unusual, and highlights the dearth of comment, both positive and negative, on the activities of individual public servants. During the postwar power crisis, for example, the media regularly reported Chairman H.G. Conde's announcements of day-to-day power restrictions or steps being taken to resolve the crisis. However, there would appear to have been little public recognition of his achievements in resolving the crisis.

Authors often comment on the achievements or failures of public policies or initiatives, and couch them with reference to the government, the Premier or the responsible minister. David Clune, for example, in describing the contribution of J.J. Cahill (Minister for Local Government 1944-1952) to the resolution of the postwar electricity supply crisis, correctly credits him with establishing the Electricity Commission in 1950.[33] However, in suggesting that the increase in the state's generating capacity, and the ending of power restrictions and blackouts were a "measure of Cahill's success," overlooks the considerable day-to-day efforts of the employees of the Electricity Commission and in particular Chairman H.G. Conde. Clune's premise is at odds with Cahill's declaration at the Commission's inaugural Board Meeting that he would not interfere with the Commission's activities.[34] It is also at odds with Conde's

---

[32] Ben Hills, "A Big Power Bill", *Sydney Morning Herald*, 4 December 1999.
[33] David Clune, "John Joseph Cahill," in *The Premiers of New South Wales 1856-2005*, ed. David Clune, Turner, Ken (Sydney: The Federation Press, 2006), 300.
[34] Electricity Commission of New South Wales, *Minutes of Board Meeting*, 22 May 1950, Item 1.1.

1956 confirmation that "the Minister does not interfere in the domestic affairs of the Electricity Commission."[35]

Likewise, only those with an interest in the industry are aware of the contributions of Aubrey W.B. Coady (Chairman 1959-1974) and Francis Brady AM (Chairman 1978-1982, General Manager 1982-1987) in overseeing the Electricity Commission's two major construction periods.[36] To paraphrase the title of Frank Hardy's novel *Power Without Glory*, public servants have various levels of authority, or power to initiate and manage change, yet rarely are they awarded public recognition or glory.[37] While not advocating public criticism or shaming for wrong deeds, and accepting that the relative anonymity enjoyed by public servants is vital to their service to the state, recognition of long-term dedication to the public good, sadly, is generally not forthcoming.

As important as the perceived financial ramifications of the Powercor contracts were at the time, of equal, if not greater, significance was the perception it generated for the Labor State Government in 1999/2000. If nothing else, the government's resolve to continue with its electricity reform agenda would have been strengthened. Labor's electricity focus at the end of the decade revolved around the final aspects of facilitating NSW's entry into the national market and Carr and Egan's conviction that the industry had to be privatised. At the core of this conviction was the belief that government participation in the competitive electricity market posed a financial risk to taxpayers. Of equal, if not greater significance for Carr and Egan was that failure to privatise would

---

[35] Conde, *The Organisation of the Electricity Commission of New South Wales and an Outline of its Activities: a talk to the Royal Institute of Public Administration (N.S.W. regional group) on May 3, 1956*: 4.

[36] Coady was Chairman during the construction of Vales Point, Munmorah and Liddell Power Stations. Frank Brady was Vice Chairman, Chairman and General Manager during the construction of Vales Point B, Eraring and Bayswater Power Stations.

[37] Interviewee L, Personal Communication, Interview or Questionnaire with author, 14 June 2011, 16 August 2012. Frank Hardy, *Power Without Glory* (St. Albans: Panther, 1975).

prevent the flow of an estimated $25 billion (or the $30 billion to $35 billion as Carr later claimed) to retire State Government debt, and boost state infrastructure projects.[38]

The Premier and Treasurer's dilemma was that, for the Labor Party, privatisation of the industry was off the political agenda, and had been since the 1997 NSW Labor Conference. With the NSW Liberal and National Parties advocating privatisation, the March 1999 state election was viewed, at least by the media, as a pseudo referendum on the issue.[39] Labor's subsequent election victory meant the provision of electricity remained a public function for the foreseeable future. Nevertheless, privatisation of the electricity industry was never far from the minds of Labor Premiers and Treasurers over the following eleven years, and proved to be a significant factor in Labor losing office in March 2010.

The dissolution of Pacific Power

Notwithstanding the previously noted comments made in 2012 by a current industry manager in relation to the financial outcome of the Powercor dispute, the adverse court ruling, while perceived to be a financial disaster, strengthened the government's resolve to end Pacific Power's involvement in power generation. The government required the management of its electricity generating utilities to be focused on operating in a competitive market environment, and not distracted by the effects of Powercor or the burden of managing its non-core assets including Powercoal, Pacific Solar and PPI. In one respect, the government's relationship with Pacific Power in 1999 and 2000 resembled the final months of the SCC's management of generation in the late 1940s and in early 1950. In each case, the government of the day lost confidence in the organisation's executive management team to resolve critical issues and to face the challenges of an uncertain future. In both instances, new public entities were created,

---

[38] Stuart Washington, "Politics of Power: A $2.6B Giveaway", *Australian Financial Review*, 15 February 1999. Carr, "Electricity Privatisation" [Accessed 20 December 2014].
[39] Stuart Washington, "Privatisation is Given the Thumbs Down, Says Labor", *Australian Financial Review*, 29 March 1999.

assets and employees transferred and new executive management teams installed. Again, problems created by the thinking of the past required resolution by people thinking anew; a new approach to the management of a critical issue.

With the transfer of Pacific Power's generation portfolio to Eraring Energy in August 2000, the government no longer considered the organisation a generating utility, and no longer subject to the privatisation restrictions set by Labor policy. Accordingly, Pacific Power's subsidiaries were privatised. Powercoal was sold to the Centennial Coal Company in August 2002, and PPI to Connell Wagner in February 2003.[40] With these sales, it was obvious, at least to Treasurer Michael Egan, that "Pacific Power [had] no remaining long-term operational activities and should, therefore, now be dissolved."[41] For the government, the financial consequences of the Powercor dispute would be hidden within Eraring Energy, and more importantly it was the conclusion of a twelve-year program of extensive and successful reform.[42] In his Second Reading of the Pacific Power (Dissolution) Bill, Egan made brief mention of the Electricity Commission and Pacific Power's history. However, it was evident that he and the government viewed dissolution in terms of the government's electricity industry reform agenda, be it significantly augmented by the organisation's tainted electricity trading performance. It is perhaps speculative to reflect that, but for the Powercor issue, Pacific Power would have remained as the third NSW electricity generator and divested itself of its non-core subsidiaries. Nevertheless, fifty years of service in providing a vital commodity to the state had come to nothing. A proud tradition was sacrificed to the neoliberal dictates of consumer choice, and business and production efficiencies. For electricity consumers of

---

[40] New South Wales, *Parliamentary Debates*, "Pacific Power (Dissolution) Bill," Legislative Council, 26 June 2003, 2264 (Egan, Treasurer).
[41] New South Wales, *Parliamentary Debates*, "Pacific Power (Dissolution) Bill," Legislative Council, 26 June 2003, 2264 (———, Treasurer).
[42] New South Wales, *Parliamentary Debates*, "Pacific Power (Dissolution) Bill," Legislative Council, 26 June 2003, 2264 (———, Treasurer).

NSW, the demise of Pacific Power meant little. For ex-employees, it may have been a time for nostalgic reflection.

Pacific Power senior managers may have reflected on the political influence and power they and the organisation once had. With the benefit of hindsight, they may have reflected that the decline commenced with the Liddell generator failures of the early 1980s, or maybe the Generation Planning Review of 1986. Possibly the state and Commonwealth Government's commitment to a NEM in July 1991 may have been the catalyst. Referring to contestable consumers and the NEM in mid-2000, Acting Chief Executive Ralph Garland noted, "we have reached a position not envisaged by our founders." [43] He may well have been commenting on what was to happen over the following three years. Robert Lang, the Acting Chief Executive, tasked with closing down Pacific Power in 2002 and 2003, reflected that the organisation had "been the backbone of this state's social and commercial infrastructure." Nevertheless the

> closing down of this once great organisation had long been foreshadowed [yet it] does not mean that it will be any less emotional or any easier for most of us. Feelings are likely to range from sorrow, even anger, to pride and definitely nostalgia.[44]

While Treasurer Egan interpreted the end of Pacific Power as the culmination of a successful reform program, the opposition's Deputy Leader Duncan Gay, saw it as the closure of "a chapter of financial mismanagement." [45] For NSW politicians of all political persuasions, with the electricity industry no longer vertically or horizontally integrated but still in public ownership, industry privatisation was not far from the main agenda. For the four public corporations that had once formed Pacific Power, its legacy remained in the plant and equipment each operated and maintained, as well as the people they

---

[43] Ralph Garland: *Pacific Power Annual Report - 2000*, 5.
[44] Robert Lang, "Finanlly the Day is Almost Upon Us", *Network*, Pacific Power, December 2002.
[45] New South Wales, *Parliamentary Debates*, "Pacific Power (Dissolution) Bill," Legislative Council, 26 June 2003, 2264 (Gay, Deputy Leader of the Opposition).

employed. For the media that had daily reported the events of the Powercor case, the sale of PPI and Powercoal and the vagaries of the NEM, the dissolution of Pacific Power warranted little mention.

For the Australian Greens' Lee Rhiannon, Pacific Power's demise was an anticlimax, a "sell-out of the Hunter region and a betrayal of power industry workers." [46] For Jeff Hunter, the Australian Labor Party (ALP) Member for Lake Macquarie, himself a former Electricity Commission power station operator, it was "a very sad day." [47] In hindsight, as Robert Lang suggested, the breakup and demise of Pacific Power had been a long-drawn-out exercise.[48] For those employees who transferred to TransGrid in 1995, or Macquarie Generation and Delta Electricity in 1996, their allegiance was increasingly with their new employer. Any lingering connection with Pacific Power would more than likely have been at a nostalgic level. Many, now exposed to a new more demanding corporate life, may have looked nostalgically back to a calmer time in Pacific Power. Similar feelings may have been evident for those who transferred to Eraring Energy in 2000. For many of those who transferred to the new public generators the payout of unused long service leave entitlements no doubt eased any transfer pain.

Conclusion

Gavin McDonell's 2004 observation that the Electricity Commission and Pacific Power had been resource hungry, and politically powerful is true for most of the organisation's fifty-two years. [49] Without doubt, it consumed vast amounts of coal and oil to fuel its power stations; billions of dollars to construct them, and the labour of tens of thousands of employees to achieve its corporate goals. Its political influence was evident

---

[46] New South Wales, *Parliamentary Debates*, "Pacific Power (Dissolution) Bill," Legislative Council, 26 June 2003, 2264 (Rhiannon, Australian Greens).
[47] New South Wales, *Parliamentary Debates*, "Pacific Power (Dissolution) Bill," Legislative Assembly, 17 June 2003, 1597 (Hunter, Australian Labor Party).
[48] Lang, "Finanlly the Day is Almost Upon Us".
[49] McDonell, "N.S.W. Government Ownership and Risk Management in a Mandatory Pool - 'Neither Fish nor Fowl nor ...'" 79.

on many instances throughout those fifty-two years. Two examples stand out; Chairman H.G. Conde securing Commonwealth funding for four ‘Package’ Power Stations to assist in resolving the postwar power restrictions. Chairman A.W.B. Coady’s negotiations, in the late 1960s, with the Miners’ Federation to enable open-cut coal to fuel Liddell Power Station in return for a guarantee that an aluminium smelter would be built on the South Maitland coalfields is another. However, from the mid-1980s as NSW benefited from an abundance of electricity generation resources, Pacific Power’s political influence waned. This and the government’s overall electricity reform program would eventually result in the demise of Pacific Power.

Despite often-robust counter arguments from Pacific Power executives and a number of trade unions, Pacific Power was disaggregated into four new SOCs over a six-year period and the remnants sold to the private sector. Pacific Power was unable to prevent the loss of control of HV transmission in 1995; two-thirds of its generation portfolio in 1996; what remained of its generation portfolio in 2000; and the last of its business units in 2002 and 2003. Finally, with all its major business activities divested, and with no long-term future, fifty-two years of service to the state ended. A politically powerful organisation for the majority of its life, Pacific Power, was not powerful enough to weather seemingly unstoppable external non-technical neoliberal forces. History, tradition, and nostalgia have a place in the hearts of many people, but not, it would seem in the hearts of the State Government.

In parallel with Pacific Power’s declining influence, its activities in the NEM, rather than bolstering the organisation’s reputation with the State Government, only hastened its demise. Rigorous trading policies and procedures that either did not exist or were not adhered to, were not, however, symptomatic of an organisation accustomed to technical success. The Powercor litigation was a rare instance in which the internal affairs of the organisation were aired publicly. Not since the NSW Ombudsman’s Liddell maintenance inquiry and the Generation Planning Review of the 1980s, had the organisation’s internal processes been in public view. In late 1999, the perceived future financial losses resulting from the Powercor litigation, while hidden deep in Pacific Power’s and later Eraring Energy’s balance sheets, would have only strengthened the Labor government’s resolve to end public ownership of electricity assets. That it took over a decade and a change in

government to achieve full privatisation of sections of the industry is arguably a testament to powerful and influential factions within the labour movement and the inability of Labor's parliamentary caucus to prosecute a policy of full privatisation.

Chapter 10 Conclusion

Introduction

This study has explored the establishment, development and dissolution of the Electricity Commission of NSW (ECNSW) and its immediate successor, Pacific Power, through a review of the evolving NSW electricity generation and transmission industry's operational and organisational structures. The study's subtitle highlights the rise of centralised coordination of electricity generation and high voltage transmission. An alternate subtitle suggests that 'no power is so dear as no power."[1] Both form connections to dominant themes in the history of the industry and the Electricity Commission. 'Rise of centralised coordination …' relates to the evolving structure of the industry during the twentieth century, and suggests that the extent of industry control, coordination of planning and operations of generation and high voltage transmission, were crucial to the successful provision of electricity to consumers. The cryptic 'no power...' on the other hand reflects a major goal of Electricity Commission senior management for most of the second half of the century. This adage characterises a management approach or mindset that suggests that the economic and political consequence of a lack of production or transmission capacities through under investment, will often be exceeded by the negative consequences to the community through power restrictions and blackouts.

The study's investigations have centred on five primary areas. The first is the rise in centralised control and coordination that encapsulates the industry's and the Electricity Commission's development. The second focused on those social factors that influenced the demand for electricity. Followed by the third that examined the technical, operational, managerial activities the ECNSW took to meet the demand. The fourth investigation examined the ECNSW's relationship with its owner, the State Government. Finally, an

[1] Brady interviewed by Hamilton, October - November 1996.

examination is presented of how the ECNSW compared with generating utilities in comparable interstate and international jurisdictions.[2]

While the history of the generation industry and the Electricity Commission encompasses multiple layers, the findings of these primary investigations, point to a number of overarching themes. The first is the crucial nature of network interconnection to the overall control and coordination of planning and day-to-day operations. Second, the organisation's belief that reliability of supply was critical, consequently, the overriding need was to ensure that sufficient generating capacity was available to meet current and projected average and peak demands for electricity. Third, the organisation's ability to remain at the centre of the NSW energy industry for much of its fifty-two years. This is despite Gavin McDonell's 2004 assertion that the Electricity Commission was a 'resource hungry, technically advanced, remote, politically powerful, but unaccountable public agency."[3] Fourth, that while utilisation of power engineering technology was at the centre of the industry's ability to provide a reliable supply, political policy and expediency often assumed precedence in the development of the industry. Whereas a discussion of these four overarching themes by necessity utilises a broad-brush approach, the fifth theme focuses on the contribution of people who were involved with the industry. A Chief Electrical Engineer from the Public Works Department in the early decades of the twentieth century, a Labor Minister for Local Government in the late 1940s, two Electricity Commission Chairmen, and a Pacific Power Chief Executive, while being at the centre of the industry in their respective period, represent the many thousands of people associated with the rise of centralised industry coordination.

In the period 1888 – 1950, electricity in NSW was generated by a myriad of local government, state government departments and private utilities. The effects of this fragmentation were exacerbated during the Second World War by increases in demand

---

[2] These include Victoria and other Australian states, in addition to New Zealand, and England and Wales.

[3] McDonell, "N.S.W. Government Ownership and Risk Management in a Mandatory Pool - 'Neither Fish nor Fowl nor ...'" 79.

and individual utilities' inability to meet these increases by commissioning new generating capacity. Increasingly severe blackouts and power restrictions plagued the state from 1946. While the immediate causes of the blackouts and power restrictions are linked, the fragmented industry's inability to ensure a reliable supply of electricity, had been over sixty years in the making. At the centre of this essentially technical problem was the dearth of interconnections between the various HV networks and the degree of planning and operational coordination between individual power utilities.

Prior to 1950, a number of inquiries, notably Rendel, Palmer and Tritton in 1937, had recommended a fully interconnected statewide high voltage network be established for sound technical reasons. However, all had foundered on the absence of suitably strong political catalyst to enable government to counter the vested interests of the local government and private authorities. Even with network interconnections established to improve network security in the early years of the Second World War, the industry remained fragmented as both production and transmission remained with separate owners, and more importantly, with minimal overall planning and operational coordination. The impasse was broken, not by local government authorities voluntarily relinquishing their control of franchised generation and transmission, rather by the State Government frustrated with the major separate utilities' inability to ensure a reliable supply. The public organisation tasked with managing and operating this centralised, statewide network was the ECNSW.

Even if effective third party coordination had been established prior to 1950, it is debatable if the fragmented industry could have resolved the postwar power crisis. At the height of the power crisis in the late 1940s, each major generating utility was separately addressing their own critical issue of the availability of new generating equipment, albeit not quickly enough for consumers or the NSW Government. On the other hand, if the fragmented industry had continued past 1950, it is highly doubtful if the essentially metropolitan based authorities would have been willing, or able, to cater to burgeoning increases in demand projected for the next decade and beyond without new construction outside their franchise areas. Such a development would have required a degree of coordination in planning and operations not evident in the fragmented arrangement.

As the owner and operator of electricity production, and importantly a single, fully interconnected HV transmission network, the Electricity Commission exercised control over all aspects of the generating industry for forty-five years 1950 to 1995. In the seven years, 1996 to 2003, the end date of this study and to the present day (January 2015), the NSW HV transmission network remains an interconnected single entity owned and operated by a single public authority. At the production level, there are, however, similarities between the generation sectors of before 1950 and after 1996. In both instances, separate utilities produced the state's electricity. The primary difference, however, is the level of coordination. In the earlier period, the absence of network and generation coordination denoted a fragmented industry. By contrast, the latter period, even with separately owned and operated utilities, operational control is exercised across the interconnected southeast Australia electricity network by a single authority, the AEMO.[4]

Effective operational coordination could not exist without networks being connected. Even with interconnections it could not exist if the parties were not so inclined. In NSW, the initial interconnections were a consequence of national security concerns rather than commercial interests of the various authorities. Full coordination became a reality with centralised ownership of the state's generating and HV transmission industry. Four decades later, disaggregation returned the generation sector to a multiple ownership environment. Effective operational coordination remained, not with a generating authority as previously, but initially with the owner and operator of the state's HV transmission network and later with a public energy management authority.

[4] New projects are subject to approval under the NSW Environmental Planning & Assessment Ammendment Act 2011 and the State & Regional Development - State Environmental Planning Policy.

Reliability of supply underpinned Electricity Commission goals

For any electricity generating utility, not least the Electricity Commission, reliability of supply underpinned the integrity of its entire supply system.[5] Socially, reliability of electricity supply was a significant factor in the overall wellbeing of the community. Few as they are, instances of the disruption of supply to public and residential life through extended blackouts and power restrictions are nevertheless inconvenient and sometimes lead to chaos. The period 1946-1953, and the more recent events of June 2007 in the Hunter region of NSW come to mind; the first through a physical lack of adequate generation capacity and the second through an unforeseen weather event. In the first instance, in a less electrified era, power restrictions and blackouts were often an inconvenience, while the weather related blackouts, were both inconvenient and disruptive in a highly electrified community. For the business community, a reliable supply of electricity is a critical element in the level of business activity and decisions to establish new enterprises in a particular state or locality. Consequently, it is not surprising that reliability of supply was inexorably linked to the corporate goals of 'supply' and 'generate' targeted by Conde, Coady, Brady and other ECNSW Chairmen. In striving to meet this goal, first, the nature and extent of the demand, and second, the magnitude and utilisation of the electricity production and transmission technologies employed to meet that demand were critical.

Electrification or the rate and nature of the spread of the use of electricity in NSW in the twentieth century can be viewed through a variety of frameworks. An economic historian might view it in relation to a free market economy with little government input; possibly a Keynesian framework with increased government input, or perhaps an economic rationalist perspective of efficiency, competition and private rather than public ownership. A social or political historian, on the other hand, may maintain that population demographics, salary and wage rates, or world, national, or local events, were critical. All

---

[5] Kirkwood Energy Services Pty. Ltd.: 1, *Power System Reliability - Generating Plant Reserves*, 1988, 1.

viewpoints are valid and have been utilised to varying degrees in this study. Nevertheless, the demand for electricity in NSW is fundamentally a function of the extent to which the community was electrified, which is both a social and technical construct.

Throughout the period under review, two distinct periods were evident in the demand for electricity; the first commencing in the late 1880s and the second in the mid-1970s. The first period witnessed the introduction of electricity as an energy source, and the progressive connection to distribution networks of existing and new industrial, commercial and residential premises. In parallel with this trend, consumers of gas and other energy sources were encouraged to transfer to electricity. Electricity powered appliances, including space heating, cooking ranges and radio were progressively introduced, further increasing demand. Industrial consumers were introduced to the benefits of the use of electric motors and electric heating in manufacturing processes. Similarly, commercial enterprises introduced electricity to illuminate their premises. The electrification of Sydney's trams in the early decades of the century and suburban railways from the late 1920s fostered suburbanisation and further increasing demand.

After the Second World War economic prosperity witnessed the burgeoning growth in demand, fuelled, in part, by electricity supplanting other forms of energy, and increases in the number of suburban dwellings in parallel with the increasing availability of domestic consumer appliances. Nevertheless, by the mid to late 1970s, the second phase of electrification emerged as electricity demand saturation was reached and the rate of demand increases slowed. Not that this was immediately apparent at the time as evidenced by the Electricity Commission's forecast of high single digit demand growth, and their plans to double the state's generating capacity over the following decade. The slowing pace of demand increases was also significantly compounded by increased production costs and a failure of projected mineral processing facilities to be fully commissioned.

The second critical factor affecting reliability of supply was the magnitude and utilisation of production and transmission technologies. Supplementary as these technologies may appear alongside seemingly heady political and economic processes, they were nevertheless crucial to the organisation achieving its primary objective of the

provision of a reliable supply of electricity. The consequence of inadequate production capacity, leading to supply unreliability, was starkly illustrated during the 1946-1953 power restrictions and blackouts. Equally, the generator failures and subsequent restrictions of the early 1980s also highlight this crucial link. The earlier restrictions were a consequence of mainly unforeseen external factors that were exacerbated by inadequate planning, operational and maintenance critical issues. The latter restrictions were the result of unprecedented, and impossible to plan for, technical failures. While these two instances were essentially technical in nature, prolonged adverse industrial relations can also have unfavourable consequences for reliability of supply. The power restrictions related to the thirty-five hour week industrial campaign of the early 1970s are a prime example. Instances such as these illustrate that, while power restrictions were not common occurrences, "no power is so dear as no power."[6]

While power restrictions and blackouts are an inconvenience to consumers, the Electricity Commission's record of reliability of supply, nevertheless remains admirable. In the period 1973 to 1982, for example, consumers experienced gazetted power restrictions of varying durations on only eight per cent of days.[7] While these restrictions were related to the thirty-five hour week campaign and the Liddell generator failures, it is important to note that for six of the ten years in this period consumers did not experience any gazetted restrictions.

In contrast to inadequate generation capacity and technical failures adversely affecting reliability of supply, the overcapacity evident from the mid-1980s contributed to high levels of reliability through the 1990s and into the twenty-first century. While essentially a function of forecasted demand not being borne out in practice, this situation, as was the case with all Electricity Commission generation planning decisions, had a connection to the restrictions of the late 1940s and early 1950s. Many senior managers involved in the

---

[6] Brady interviewed by Hamilton, October - November 1996.
[7] *Report of the Electricity Commission of New South Wales on Performance and Future Direction*, 25-26.

1980s' construction boom commenced their careers in the earlier period. The lessons of the 1950s influenced their decisions in later years. In planning for the expected increases in demand of the 1980s and beyond, these managers, unconsciously or not, were mindful of the refrain that "no power is so dear as no power."[8]

To the consumer of electricity, the second factor influencing reliability of supply, the manner in which generating assets are utilised, may appear irrelevant. Capacity Factor, a primary index of utilisation, is equally irrelevant. By contrast, generating utilities would view Capacity Factor, or similar indices of plant utilisation, in addition to being an indicator of utilisation, as a crucial economic measure of the return on their investment in generating plant and equipment. A low Capacity Factor indicates the underutilisation of plant and equipment. At the other extreme, an excessively high Capacity Factor, while indicating increased plant utilisation, could also indicate that additional plant was required and thus additional capital works expenditure. The high Capacity Factors during the second half of the 1940s were indicative of plant and equipment being operated at or near their maximum effective output.

At the centre of the NSW ESI for fifty years.

Crucial to any study of the Electricity Commission are questions related to the tasks it was set by government and the extent to which these were achieved. Not surprisingly, the Electricity Commission's Annual Reports up to the mid-1990s detail the primary corporate objective as the provision of bulk electricity. Whether the term used was "supply" as in 1952; "generate" in 1980, or "safe, reliable and adequate at the lowest possible, practicable cost" in 1982 and 1990, the goal was the same, the provision of bulk electricity.[9] These and other Annual Reports point to increases in the quantity of electricity produced, and for the thirty years to the mid-1970s sold at average annual declining prices. Later Annual Reports, however, record a slowing in demand and cost increases. The factors that had resulted in declining prices in the earlier period diminished

---

[8] ——— interviewed by Hamilton, October - November 1996.

[9] *Annual Reports of the Electricity Commission of New South Wales / Pacific Power.*

or were exhausted in the latter. Lower fuel cost advantages as a consequence of siting power stations on the coal fields were diminished as less electricity was produced in metropolitan power stations. Even the benefits of higher outputs at higher production efficiencies and economies of scale diminished as generator size stabilised at 660 MW and the last major base load power station, predominately fuelled from open-cut mines, was commissioned in the mid-1980s.

The Electricity Commission's primary corporate objectives, while perhaps similar in wording or intent during its tenure, presented themselves as different critical issues depending on the environment in which it was operating at the time. However, at the centre of the resolution of each critical issue was the primary goal of the provision of a reliable supply of electricity. Its success in achieving this primary goal, and related critical issues was critical to it remaining at the centre of NSW's electricity industry for over forty years. As with the SCC's demise as an electricity generator following its failure to resolve critical issues confronting the postwar ESI, Pacific Power's (the ECNSW's successor) inability to resist disaggregation in 1996, and the loss of its generation portfolio in 2000, were precursors to its demise in 2003. Pacific Power, despite achieving its corporate objectives, in the eyes of the government was considered inept as a trader of electricity and not compatible with a competitive national electricity market.

In the organisation's first decade, the transformation of the generating divisions of the four major, somewhat parochial, electricity authorities into a single coordinated organisation with a statewide outlook, foreshadowed a changing corporate focus and objectives, as the political, social, economic and technical environment altered. The cultures, work practices, rates of pay, and working conditions of the fragmented utilities were amalgamated into a single organisation. Throughout the 1960s, 1970s and into the 1980s, the primary objective of supply was realised as burgeoning demand drove power station construction; first at Vales Point, then Munmorah, Wallerawang, Liddell, Vales Point B, Eraring, Bayswater and finally Mt Piper power stations. Inherent in the execution of such a significant construction program over many decades were the consequential changes as the organisation's managerial, coordination and operational expertise adapted to frequently overlapping major construction projects in diverse locations.

The political and economic environment embodied in economic rationalism of the late-1980s and early-1990s, forced the organisation to change yet again. Unlike previous decades of increasing generating capability, the late-1980s and early 1990s heralded the stabilisation of asset growth, improved business processes and a substantial decline in employee numbers through voluntary redundancies. In earlier periods, employee numbers and productivity had increased as a consequence of the increased output of new generating units. In the later period, employee productivity also increased, but as a function of reduced workforce numbers.

With the turn to a more commercially focused business approach in the late-1980s and early-1990s, Pacific Power's corporate objectives appeared to relegate electricity production to, if not secondary status, then to seemingly lesser importance. In reality, it was more of a widening or growing appreciation of the business opportunities available in interstate and international energy services industries. The intent of corporate objectives reflected these changes. Seeking "efficiency of operations comparable to similar businesses" and "maximising the value of the business" became prominent mantras.[10] Nonetheless, many people with a long association with the organisation; the engineering body that had been established to eliminate the power restrictions of the late-1940s; the organisation that had provided a reliable supply of electricity for over four decades, were concerned that the organisation had been transformed into a relatively small electricity generator with a focus on overseas business opportunities.

In concluding that the main reason for the organisation surviving for over fifty years was its ability to meet its primary goal of the provision of a reliable supply of electricity through adapting to its changing environment, nevertheless highlights that in its final decade, Pacific Power was often not in a position to develop change strategies acceptable to the government. With the benefit of hindsight, the journey to disaggregation in 1995/1996 commenced five years earlier when federal and state governments initiated a series of micro-economic reforms. The NEM, one of the outcomes of these Heads of

---

[10] *Pacific Power Annual Report - 1998,* 44.

Government initiatives, was in part predicated on there being many generating utilities of roughly equal size bidding into the competitive market process. Such a requirement implied that the proposed markets' largest utilities, the SECV and Pacific Power could not continue in their multi-power station configuration. The SECV was split into a number of smaller generating utilities that were quickly privatised. In a similar vein, Pacific Power's HV transmission network, and seventy per cent of its generating assets were transferred to three new SOCs. Pacific Power, once Australia's largest electricity generator, became the smallest of the three major generators in NSW.

However, the implementation of the NEM does not fully explain Pacific Power's dissolution in January 2003. At first glance, it is difficult to ascertain the reason for Pacific Power's demise. Transmission had been established as a separate entity, and generation had been split into utilities of a size more compatible with a competitive electricity market. A review of the differences between Pacific Power in mid-2000 and its successor Eraring Energy, twelve months later, however, suggests that the government had lost confidence in Pacific Power's ability to operate successfully in the competitive NEM. The reason does not lie in the generation assets that each operated – they were the same. Nor does it lie in the application of the skills and expertise of the respective workforces. Again, they were the same since the majority of Pacific Power's employees transferred to the new organisation. The crucial point is that in the government's eyes, Eraring Energy, as a newly formed entity, had no previous cultural, procedural or political baggage to sully it. Pacific Power, on the other hand, was tainted with the stigma of the Powercor market trading irregularities that were being reported to cost the NSW taxpayer an estimated $600 million over the following six to seven years.

Perhaps the most telling difference between the two organisations rested in the composition of the Eraring Energy Board of Directors and, more importantly, its senior executive team. Of Eraring Energy's Board, only two of the six members, the Chairman and a Director, had held similar positions with Pacific Power. Significantly, Pacific Power's last Acting Chief Executive, who had previously headed the Market Trading group at the time of the Powercor matter, chose not to transfer, or more likely was not offered the opportunity to do so. While Eraring Energy's six-person executive team included three from Pacific Power, the crucial roles of Managing Director and General

Manager Trading were external appointments. Although a number of Pacific Power electricity market trading personnel transferred to Eraring Energy, the appointment of a non-Pacific Power person to head that group highlights the new Board of Directors' and government's wish to distance Eraring Energy from the problems associated with Pacific Power's market trading activities.

Technological progress

The ongoing development of the technologies utilised in the production of bulk electricity by the ECNSW / Pacific Power and their predecessors was crucial to meeting society's demand for electricity. While the majority of these developments were imported, they nevertheless revolved around increases in generating unit output, and many small incremental technical and procedural refinements. There have been a limited number of radical changes in principles of electricity generation.[11] Apart from the move from direct current to AC technologies, and from reciprocating prime movers to steam turbines in the late ninetieth and early twentieth centuries, these developments have generally related to the source, and method, of energy input into the power generation cycle. For the ECNSW and its predecessors, chemical energy in various forms of fossil fuels to fire a boiler to produce steam were prominent. Renewable sources of hydro and wind energies, while important, made small to moderate contributions. Other forms of energy such as the chemical energy in biological material, nuclear energy or various forms of solar energy were not utilised.

Technology is Important, however…

An additional theme evident in this study, while not exclusive to the ECNSW, is applicable to technological development in general and relates to the interaction between technology and social forces and processes. For an electricity generating utility, the type and size of electrical supply assets commissioned were subject to multiple inputs. These include, available natural resources, financing for capital works construction, educational

---

[11] Brian Bowers, *A history of Electric Light & Power*, History of technology series (London: Peregrinus in association with the Science Museum, 1982). 169.

resources to provide a skilled workforce, and a political and economic environment that promotes industrial, commercial and residential development and by inference the consumption of electricity. This demand for electricity, however, is an essentially independent variable that the owners and operators of generating technology have little control over. The corporate objective of reliability of supply dictates that an electricity authority plans for and manages its assets to meet that demand. In this environment, almost the only influence a supplier may have on demand is limited to the price it charges. Governments also exert influence through the control of finance for public capital works, or through regulatory regimes.

While engineers and industry operatives are heavily involved with technological specifics, technology, as important as it is, is not the sole player in the generation, transmission, distribution and retail of electricity to the consumer. Moreover, for a heavy engineering organisation such as the Electricity Commission and the utilities that preceded it, non-technical issues generally took precedence in policy decisions.[12] The fragmented industry of the first half of the twentieth century was not a consequence of a lack of suitable production and especially transmission technologies. Widespread interconnected electrical networks had been established in other Australian and international jurisdictions early in the century. As William Corin found, a valid technical goal was not a sufficient catalyst to ensure a project was initiated and completed. His vision of a statewide bulk interconnected electricity network did not eventuate until network security became an issue in the early years of the Second World War.

The sound technical goal of a coordinated generation industry did not eventuate until four years of increasingly severe power restrictions and blackouts prompted the government to centralise the industry. That the government procrastinated over this decision for four years, however, suggests that the power crisis alone, dire as it was, did not provide a sufficient political catalyst in itself to force change. The close proximity of

---

[12] Melvin Kranzberg, "Technology and History: "Kranzberg's Laws"," *Technology and Culture* 27, no. 3 (1986): 550.

the establishment of the Electricity Commission in May 1950 and the June 1950 state election would suggest political pragmatism also played a significant part. Forty-five years later the technical benefits of maintaining the NSW electricity generation industry as a single entity foundered on the imperative of efficiency and competition in the guise of micro-economic reform.

'Resource hungry, technically advanced, remote and politically powerful'

Throughout this study, a number of references have been made to Gavin McDonell's 2004 comment that the Electricity Commission/Pacific Power was a 'resource hungry, technically advanced, remote, politically powerful, but unaccountable public agency."[13] While a number of McDonell's conclusions are accurate, others require amendment. Over its fifty years as an electricity generator, the organisation without doubt consumed significant quantities of natural, financial and human resources. In the 1981-1982 financial year, for example, ECNSW power stations consumed over fourteen million tonnes of coal, eighty-six thousand tonnes of fuel oil, thousands of litres of fresh water and uncountable millions of litres of salt water.[14] Financially, in this year alone, power station capital works expenditure consumed $586 million, the highest of the previous five years.[15] As an employer, the organisation employed over 11,200 people, the highest in its fifty-year existence. Yet, high as these statistics undoubtedly are, most were greater than the previous year and less than the following year.

Technically, the ECNSW/PP commissioned and operated many advanced technologies in their ongoing quest to ensure that production and transmission capacities remained ahead of current and projected demand. Technical innovations in the 1960s and 1980s were either Australian firsts or the largest installation of their kind in the world at the time. While following the long established technical configuration of base load power

---

[13]McDonell, "N.S.W. Government Ownership and Risk Management in a Mandatory Pool - 'Neither Fish nor Fowl nor ...'" 79.
[14] *Annual Report for the Year Ended 30th June 1982,* 66.
[15] *Annual Report for the Year Ended 30th June 1982,* 34.

stations, the innovations and the commissioning processes employed, meant that first-of-class stations such as Vales Point (early 1960s) and Eraring (early 1980s) set the benchmark for future base load ECNSW power stations. However, the term 'technically advanced' does not necessarily imply perfection. The Electricity Commission and Pacific Power, as with most electricity utilities, had their share of boiler explosions, boiler tube leaks, turbine failures, generator failures, fires, safety related accidents or environmental incidents. Similarly, the electricity trading irregularities of the late 1990s were technical failures, not of physical assets, but of policy and implementation.

McDonell's observation that the ECNSW/PP was a remote and unaccountable organisation is partly accurate. Transparency was absent in how the ECNSW calculated the BST in its early decades. Equally, the pricing of electricity to aluminium smelters from the 1960s was hidden under the cloak of 'commercial-in-confidence.' In a commercial sense, the absence of transparency may be acceptable, except for the suspicion that ordinary consumers were subsidising the cost of electricity to the smelters. By contrast, transparency was not an issue when it came to the ECNSW's primary function - electricity supply was available, or it was not. To the consumer, its absence was obvious. To a large degree the manner in which supply was provided was irrelevant, as long as it was available. Admittedly, the price the consumer pays for the service is important when it is high or increasing. However, it is doubtful cost was an issue for many consumers when the price was decreasing during the Electricity Commission's first two decades. Overall, issues of price, asset ownership, or the environmental impact of electricity production, are all valid concerns provided supply is maintained. To paraphrase an alternate subtitle of this study, 'no power is so dear as no power,' [16] Few issues or concerns are as important as the availability of power.

Was the ECNSW/PP politically powerful? For its initial three-and-a-half decades, it unquestionably was. To some extent the manner in which successive state governments regarded the ECNSW and its activities fostered a culture of self-imposed bureaucratic

---

[16] Brady interviewed by Hamilton, October - November 1996.

isolation. This relationship was first enunciated by J.J. Cahill at the Electricity Commission's inaugural meeting in May 1950. Cahill's comment that it was not his intention to interfere with the Electricity Commission's activities, highlight the relationship between the ECNSW and successive governments.[17] In practical terms, this policy was evident in the responsibilities that the government gave Chairman H.G. Conde to resolve the postwar power crisis. Cahill delegated to Conde the responsibility to approach the Commonwealth Government for funds to purchase the sixteen 'Package' generating units from the US. These played a crucial role in resolving the power crisis and forestalling the need, at least for a few years, to build a number of HV transmission lines in regional areas. A further example of the political acumen of the Electricity Commission was evident in Chairman A.W.B. Coady's negotiations with the Miners' Federation in relation to open-cut coal for Liddell Power Station, and his undertaking to lobby the government to establish an aluminium smelter in the lower Hunter Valley.

The Liddell generator failures inquiry of the early 1980s, the inability to fuel Eraring Power Station with open-cut coal, and certainly the 1986 inquiry into generation planning, halted three decades of engineering and political autonomy and heralded an increase in political scrutiny. By the late 1980s, and into the 1990s, the ECNSW, in addition to continuing to meet its primary goal of producing electricity, had to contend with external political events outside its control or influence. Internal commercialisation coupled with external liberalisation of the industry as a whole occasioned changes in the organisation's business model (internal competition, and the quest for external energy service contracts), dramatic changes to workplace culture, and a new trading name. However, these events, by themselves, could be viewed as part of normal activities in an evolving business and political environment. That the organisation undertook these changes on its own initiative, admittedly in the context of impending major changes to the industry, is indicative of an organisation seemingly in control of its future, at least as it

---

[17] Electricity Commission of New South Wales, *Minutes of Board Meeting,* 22 May 1950, Item 1.1.

envisaged it. However, by the mid-1990s, all pretence that Pacific Power remained politically powerful had dissipated. The ‘balkanisation’ of Pacific Power, as Chairman Ross Bunyon characterised the proposed breakup of the organisation, became a critical aspect of Premier Carr and Treasurer Egan’s electricity industry reforms in preparation for implementation of a national electricity market. The government was not swayed by either Pacific Power’s or the trade union movement’s, objection to the breakup. Neither was the government concerned about the historical implication of the breakup. Forty-five years of service to the community meant little in the harsh reality of political and economic expediency.

Any political standing that Pacific Power may have had with the NSW Government was finally exhausted in the late-1990s with the Powercor electricity trading irregularities, and the subsequent adverse finding in the Commercial Jurisdiction of the Supreme Court of Victoria. The government’s loss of confidence in Pacific Power’s ability to successfully operate in a competitive electricity market precipitated the organisation’s demise. Again, a proud history of service to NSW meant little when taxpayers’ money was at risk. For nearly fifty years, successive state governments had been prepared to finance billions of dollars of electricity production and transmission infrastructure construction. However, the projected loss of hundreds of millions of dollars as a consequence of poor implementation of questionable electricity trading policies was unacceptable.

Key players and why each was important

In an industry that employed thousands of people over many decades, it would be impossible to acknowledge the contribution each made. Nonetheless, the contributions of five key people in the fragmented industry and then the Electricity Commission stand out. In the early decades of the century the Department of Public Works’ William Corin, in addition to his advocacy of the state’s hydro-electricity resources, championed, albeit unsuccessfully, the establishment of a statewide interconnected HV electricity network. H.G. Conde, the Electricity Commission’s first Chairman, had without doubt, the greatest influence on the structure and operation of the organisation in its early decades. Conde formed a single united organisation from the often disparate aspects of the four major pre-1950 generating utilities, and established an organisational structure that remained

essentially unchanged for three decades. Conde and his Chief Engineer, Fred Sykes, in addition to being instrumental in confirming the move to coalfield-based production, established the organisation's overall technical structure. However, Conde's most important contribution to the electricity consumers of NSW was his managerial expertise in the resolution of the postwar power crisis. These restrictions, six years in the making; a reality for four, were resolved by Conde and his newly formed organisation in three.

Frank Brady held senior managerial positions in the Electricity Commission for over thirty years, including the roles of Vice-Chairman, Chairman then General Manager from the mid-1970s to the late-1980s. Concurrent with these heady years of construction and expansion, Brady had to shepherd the organisation through a period of the first technology related power restrictions since the early 1950s. In addition, he had to contend with an increase in the political and media scrutiny associated with these restrictions and the later political concern over the organisation's generation planning policies. More than any other ECNSW Chairman, Brady embodied the notion that power station and transmission line construction were paramount and "no power was so dear as no power."[18] Brady's career also highlights the fact that managers are of their time, and often unsuited for the resolutions of problems of a later time.[19] Managers of the early to middle years of the ECNSW focused on the technical issues of maintaining generation capacity ahead of demand. As evidenced in the mid to late 1980s, as the organisation generation planning processes were under scrutiny, management's outlook (and that of senior personnel) changed from expanding capacity through technology to maintain reliability, to managing existing technology to achieve cost-effective and efficient reliability. Brady, perhaps wistfully, commented that the days when reliability of supply was the primary KPA were over, and process and business efficiency were to the fore.[20] Similarly, managers of the pre-1950 fragmented industry proved incapable of resolving

---

[18] Brady interviewed by Hamilton, October - November 1996.
[19] Hirsh, *Technology and transformation in the American electric utility industry*: xi.
[20] Brady interviewed by Hamilton, October - November 1996.

the postwarwar power crisis and were absent from the ECNSW management team that did resolve it.

Both J.J. Cahill, Minister for Local Government in the NSW Labor government (1944-1952), and Ross Bunyon, Pacific Power Chairman in the mid-1990s, championed the concept of central ownership and coordinated operation of the NSW generating and transmission industry. However, the contrast between the two is noteworthy. Cahill strove to move the industry from its pre-1950 fragmented structure. While his initial attempt (Electricity Authority – 1946) failed to provide a level of industry coordination to forestall the increasing power crisis, his 1949 appointment of an Emergency Electricity Coordinator paved the path to the complete centralisation of the industry. Bunyon, on the other hand, strove, albeit unsuccessfully, to maintain Cahill's creation. By the time he became Chief Executive in 1992, non-technical issues of efficiency, and competition had come to the fore and transformed the engineering-dominated organisation that Conde and Brady had overseen. Bunyon promoted drastic internal change programs in order to break the cultural link to what he saw as an inefficient past. Self-Managed Teams, internal competition, and TQM procedures were introduced. Nonetheless, Bunyon had to contend with an issue that none of his predecessors faced – the potential breakup of the organisation. In opposing disaggregation, he and other senior executives highlighted the benefits of a unified organisation, including those related to winning international energy services contracts. For Bunyon, the negative consequences of the possible breakup of the organisation were characterised as the "balkanisation" of the industry.[21] The benefits of a large organisation, he believed, could not be matched by the sum of its disaggregated parts.

Legacy

The rise and fall of the Electricity Commission of NSW and Pacific Power is a case study in the rise of centralised coordination of electricity generation and high voltage transmission in NSW. The legacy of this "resource hungry, technically advanced,

---

[21] *General Manager's Energy Outlook Address*, 2.

politically powerful, and […] remote" public enterprise continues to exert an influence on the political, economic, and power engineering landscape of NSW.[22] Two decades after the last NSW major base load electricity generators were commissioned, NSW consumers continue to reap day-to-day benefits from the practical application of the Electricity Commission's power station expansion policies. In the mid-1980s, these policies were questioned by the State Government and the media as overly ambitious. Nevertheless, they were born of the experiences of young engineers during the postwar power crisis of 1946 to 1953. In later years, as senior engineers or executive managers, many of these people resolved, perhaps subconsciously, not to subject NSW consumers to the true cost of supply not being able to meet demand. In the second decade of the twenty-first century, long after these people left the industry, their legacy remains as a new generation of managers, engineers and other professions remain committed, some would argue at an excessive cost to NSW consumers, to providing a reliable supply of electricity.

It is debatable if ex-Electricity Commission employees currently working in the industry can be characterised as a legacy of the organisation. Many currently in senior management and engineering positions commenced their careers and acquired their skills and expertise in the ECNSW or Pacific Power. Importantly, they were also inculcated with the culture of these organisations. It is not surprising, then, that current management and technical cultures evident in TransGrid, AGL Macquarie, Delta Electricity, and at Origin Energy's Eraring Power Station, contain traits, mindsets and attitudes, from an earlier period. Nevertheless, they are a link, as is the infrastructure, to a public organisation that supplied an indispensable commodity and service to the state and its people.

For those people who worked in the industry and the Electricity Commission and Pacific Power in particular, this study may prompt varied memories. Perhaps the satisfaction they felt in their contribution to the industry and the people of NSW. Images

---

[22] McDonell, "N.S.W. Government Ownership and Risk Management in a Mandatory Pool - 'Neither Fish nor Fowl nor ...'" 79.

of past colleagues may come to mind - workplace larrikins, a knowledgeable supervisor, or an antagonistic peer. The study may bring to mind experiences some would rather forget – being passed over for a desired career promotion or a summons to the Chairman's office to discuss an engineering project or the progress of industrial relations negotiations. Those once involved in the day-to-day production of electricity may be reminded of working with multibillion dollar assets. Perhaps the emotions experienced when maintenance of an item of plant was successful; maybe the gut-wrenching reaction when a 660 MW generating unit experienced a major plant failure; or the subdued elation following successful resolution of a significant financial problem. However, for many lacking a strong connection to the industry, a history such as this, perhaps understandably, is a political and economic discussion. For many in the industry, while politics and economics are important, these aspects rarely influenced, at least directly, their work experiences.

Appendices

Appendix One - Blackouts and power restrictions

From a consumer's perspective, there are two types of situations resulting in a reduction of electricity supply – blackouts and power restrictions. The essential difference between the two centres on the amount of time consumers receive prior to the reduction of supply. Blackouts generally result from a loss of generation or transmission capacity that is often a consequence of a single technical event. Infrequently, these events have the potential to cause subsequent failures and eventual failure of part or all of the system. The electricity authority and the consumer receive no prior warning or notice of the failure or loss of supply. One of the most severe examples of this type of blackout occurred on 11 September 1958 when a floating crane struck a high voltage transmission line strung across the Parramatta River. The resulting blackout lasted for twelve hours. Many of the instances of a sudden loss of supply during the postwar power crisis were of this type. Situations such as these were more distressing during periods when little or no spare generating capacity was online at the time. Blackouts also occurred when the network operator deliberately instigated them to ensure that the system does not fail or collapse. Again, this was most likely to occur in periods when the availability of electricity does not match the demand. Blocks of consumers were disconnected from the system without notice in order to reduce the demand. From a consumer's perspective, this is seemingly on a random basis.

The second type of reduction of electricity supply - power restrictions - are those situations in which the generating authority, mindful of the quantity of available electricity and the projected demand, issued Notices of Restrictions, often supported by government regulation, on the use of electricity. In December 1950, the recently established Electricity Commission banned the use of domestic radiators between 7am and 9pm, and only electric clocks, refrigerators and radios could be used between 8am and 9:30am. In addition to near complete bans during the morning peak, industry was required to cut its maximum demand by thirty per cent. By April 1951, the power situation had deteriorated to a point where industrial and commercial consumers could not use any electricity on a specified day in each week.

Appendix Two - Personal rationale for this study

Frank Brady, a former Vice-Chairman, Chairman and General Manager of the Electricity Commission (1975-1987), has suggested that heritage is generally associated with physical objects.[23] In the legal system, for example, heritage can be seen in the profession's treasures or the headwear and gowns that judges and barristers wear. Equally, legal heritage also encompasses the Rule of Law, the Australian Constitution, former prominent legal luminaries and the jury system. Similarly, the heritage of the power generation industry extends beyond gleaming vertical reciprocating steam engines, marble-floored control rooms, or large complex thermal power stations.

In my experience, the majority of people retiring from the power generation industry, or possibly any industry, elect not to have any further contact with their previous workplace. Clearly, for many this separation does not include former colleagues, with some remaining acquaintances or friends for many years. Many retirees, however, would not devote their early retirement years to researching and writing a history of their industry.

The first five years of my career with the Electricity Commission were as an Assistant Power Plant Operator (APPO) at Liddell Power Station in the upper Hunter Valley of NSW. For the following thirty-two years, I was involved in vocational training, first in Power Plant Operator training at both Liddell and Eraring Power Stations. Later this role expanded to the management of training at Eraring. I retired in 2007 as Eraring Energy's Training Manager.

While these roles engendered an ongoing fascination with power engineering technology, it was the dissolution of Pacific Power in 2003 that connected a love of history with the history of the power generation industry and the ECNSW/Pacific Power in particular. This connection manifested itself through the ECNSW/Pacific Power's photographic collection that was transferred to Eraring Energy in 2002. This collection of

---

[23] Alan Deans, "Frank Brady", *Australian Business*, 1 April 1982.

over 180,000 images chronicled over forty years of power station and transmission line construction, operation and maintenance. In addition, the collection is a record of employees in both work and social activities. In early 2007, with retirement looming ever closer, a chance conversation with a senior Eraring Energy manager raised the idea of combining my involvement in the photographic collection with my love of history. On commencing this current research, the photographic collection, initially the primary window into the history of the Electricity Commission became one of many windows, in perhaps a more traditional doctoral research project.

Once I had commenced my research, a hitherto subconscious justification for the project came to the fore. Most commentators on the industry have researched and written on political, economic or technical aspects. Important as these works are, none presents an appropriate acknowledgment of the contribution of the many thousands of people associated with the industry over the twentieth century, or the ECNSW/ Pacific Power from 1950 to 2003. While it is impossible to acknowledge the contribution of the remaining thousands of people by name, profession, or occupation, this study is intended as a tribute and a gift to those who worked, or continue to work in the industry.

Bibliography

Primary Sources

Brydson, Leigh, and Colin O'Reilly. "One Pacific Power: An Expression of Opinion by the Employees of Pacific Power." Electricity Commission Salaried Operators Association, 1995.

Cox, Peter (Minister for Energy and Water Resources), Letter to Don George (Vice Chancellor, University of Newcastle), 12 September 1984

Guest, Mark (Corporate Secretary, Residual Business Management Corporation), Letter to Kenneth Thornton January - December 2009.

Stockdale, A. "State Withdraws from Negotiations with Alcoa." 18 July 1995. Press Release.

Oral Histories

Brady, Frank, interviewed by Mary Ann Hamilton, MLOH 286/34 - 39 (Partial Restrictions), Mitchell Library Oral History Collection, State Library of New South Wales, October - November 1996.

Interviewee B. *Personal communication with author*, 4 July 2011.

Interviewee C. *Personal communication with author*, 8 and 21 December 2010.

Interviewee F. *Personal communication with author*, 4 December 2011.

Interviewee G. *Personal communication with author*, 3 May 2012.

Interviewee H. *Personal communication with author*, 8 February 2011.

Interviewee I. *Personal communication with author*, 21 January 2014.

Interviewee K. *Personal communication with author*, 6 September 2010.

Interviewee L. *Personal communication with author*, 14 June 2011, 16 August 2012.

Interviewee M. *Personal communication with author*, 22 October 2010.

Electricity Commission of New South Wales / Pacific Power

1980 Annual Review of Power Station Operations, Power Division - Generation Group, Sydney: Electricity Commission of New South Wales, 1980.

1981 Annual Review of Power Station Operations, Sydney: Electricity Commission of New South Wales, 1981.

1986 Annual Review of Power Station Operations, Power Division - Generation, Sydney: Electricity Commission of New South Wales, 1986.

Annual Report for the Year Ended 30th June 1952, Sydney: Electricity Commission of New South Wales, 1952.

Annual Report for the Year Ended 30th June 1953, Sydney: Electricity Commission of New South Wales, 1954.

Annual Report for the Year Ended 30th June 1957, Sydney: Electricity Commission of New South Wales, 1958.

Annual Report for the Year Ended 30th June 1959, Sydney: Electricity Commission of New South Wales, 1959.

Annual Report for the Year Ended 30th June 1970, Sydney: Electricity Commission of New South Wales, 1970.

Annual Report for the Year Ended 30th June 1980, Sydney: Electricity Commission of New South Wales, 1980.

Annual Report for the Year Ended 30th June 1981, Sydney: Electricity Commission of New South Wales, 1981.

Annual Report for the Year Ended 30th June 1982, Sydney: Electricity Commission of New South Wales, 1982.

Annual Report for the Year Ended 30th June 1983, Sydney: Electricity Commission of New South Wales, 1983.

Annual Report for the Year Ended 30th June 1984, Sydney: Electricity Commission of New South Wales, 1984.

Annual Report for the Year Ended 30th June 1989, Sydney: Electricity Commission of New South Wales, 1989.

Annual Report for the Year Ended 30th June 1990, Sydney: Electricity Commission of New South Wales, 1990.

Annual Report for the Year Ended 30th June 1991, Sydney: Electricity Commission of New South Wales, 1991.

Annual Reports of the Electricity Commission of New South Wales / Pacific Power, Sydney: Electricity Commission of New South Wales / Pacific Power, 1953 - 2000.

Bunyon, Ross. "Commercialisation of Public Electricity Authorities." Paper presented at the Power Generation in the 90's Conference, Sydney, 7/8 October 1990.

———, *Pacific Power Annual Report - 1994*, Sydney: Pacific Power,

———, *Pacific Power Annual Report - 2000*, Sydney: Pacific Power,

———. "Restructuring Australia's Electricity Supply Industry." Paper presented at the Asian Electricity Conference, Hong Kong, 26-27 April 1994.

———, *General Manager's Energy Outlook Address*, Sydney: Pacific Power, 1993.

———, *Electricity Industry Restructuring: What Pacific Power Stands for and What It Does Not.*, Sydney: Pacific Power, 1994.

Conde, H. G., Electricity Commission of New South Wales, *Power Statement, 7 May 1951*, Sydney: Electricity Commission of New South Wales,

Conde, John, *Four Decades of Achievement*, 25 (1), Electricity Commission of New South Wales, 1990.

———, *Annual Report for the Year Ended 30th June 1992*, Sydney: Pacific Power, 1992.

Conde, John, and B. P. Flanagan, *Electricity Commission Restructure Continues*, Electricity Commission of New South Wales, 1991.

Costain Australia Limited, Electricity Commission of New South Wales, *Eraring Coal Project: Open Cut Mining Feasibility Study*, Sydney: 1979.

Egan, Michael, Treasurer, "Pacific Power (Dissolution) Bill," Legislative Council, *Hansard*. 26 June 2003

———, Treasurer, "Pacific Power and Powercor out of Court Settlement," Legislative Council, *Hansard*. 6 September 2000

The Electricity Commission of New South Wales - a General Outline of the Organisation and Activities of the Electricity Commission of New South Wales., Sydney: Electricity Commission of New South Wales, 1965.

Electricity Commission of New South Wales, *Annual Report of the Electricity Commission of New South Wales - for the Period 22nd May, 1950, to 30th June, 1952*, Sydney: Electricity Commission of New South Wales, 1953.

———, *A Decade of Progress: 1950-1960.*, Electricity Commission of New South Wales, 1960.

———, *Report of the Electricity Commission of New South Wales on Performance and Future Direction*, Sydney: 1983.

———, *Proposed Power Developments on the Central Coast*, Electricity Commission of New South Wales, 1984.

Electricity Development and Fuel Sourcing Plan, Sydney: Pacific Power, 1992.

Garland, Ralph, *Pacific Power Annual Report - 2000*, Sydney: Pacific Power,

Gay, D.J., Deputy Leader of the Opposition, "Pacific Power (Dissolution) Bill," Legislative Council, *Hansard*. 26 June 2003

———, Deputy Leader of the Opposition, "Pacific Power and Powercor out of Court Settlement," Legislative Council, *Hansard*. 6 September 2000

Hunter, J., Australian Labor Party, "Pacific Power (Dissolution) Bill," Legislative Assembly, *Hansard*. 17 June 2003

"Inside Pyrmont Power Station." Sydney: Electricity Commission of New South Wales, 1961.

Kirkwood Energy Services Pty. Ltd., *Power System Reliability - Generating Plant Reserves*, 1, Sydney: Electricity Commission of New South Wales, 1988.

Liddell Power Station: Plant Improvement and Life Extension Study: Execurive Summary, Sydney: Electricity Commission of New South Wales, 1988.

National Electricity Market - Paper Trial Information Kit, National Grid Management Council, 1993.

Pacific Power Annual Report - 1993, Sydney: Pacific Power,

Pacific Power Annual Report - 1994, Sydney: Pacific Power,

Pacific Power Annual Report - 1996, Sydney: Pacific Power,

Pacific Power Annual Report - 1997, Sydney: Pacific Power,

Pacific Power Annual Report - 1998, Sydney: Pacific Power,

Pacific Power Annual Report - 2000, Sydney: Pacific Power,

Public Relations Office. "Operation of Pyrmont Power Station." Electricity Commission of New South Wales, 1980.

"Report to the Treasury State of New South Wales Sydney, Australia." New York: Salomon Brothers, 1981.

Rhiannon, L., Australian Greens, "Pacific Power (Dissolution) Bill," Legislative Council, *Hansard*. 26 June 2003

Riordan, Bernie. "Notice to Members." Electrical Trades Union of Australia, 1995.

A Single Award for All Commission Employees, Electricity Commission of New South Wales, 1991.

State Records Authority of New South Wales, *Records of an Inquiry under Section 19 of the Ombudsman Act, Concerning Alleged Inadequate Maintenance Procedures by the Electricity Commission at Liddell Power Station. Nrs 10871. 1982*, 2010,

———, Electricity Commission of New South Wales, *Minutes of Board Meeting*, NRS 16540/1/1 to NRS 16540/1/129, Sydney: Electricity Commission of New South Wales / Pacific Power, 1950 - 2002.

State Records of NSW, Electricity Commission of New South Wales, *Minutes of Board Meeting*, NRS 16540/1/1, J. J. Cahill.

Strategic Plan: Meeting Customer Demands, Sydney: Electricity Commission of New South Wales, 1989.

"We Build a Power Station - Lake Macquarie." Sydney: Electricity Commission of New South Wales, 1958.

West, G, Parliamentary Secretary, "Pacific Power (Dissolution) Bill," Legislative Assembly, *Hansard*. 17 June 2003

United Kingdom - Government

United Kingdom, Department of Energy, *The Structure of the Electricity Supply Industry in England and Wales: Report of the Committee of Inquiry [Appointed by the] Department of Energy*, London: H.M.S.O., 1976.

New South Wales - Government and Statutory Authorities

Annual Report of the General Manager of the Sydney County Council for the Year 1950, Sydney: Sydney County Council, 1950.

Annual Report of the General Manager of the Sydney County Council for the Year 1951, Sydney: Sydney County Council,

Boyd, G.S., *Report of the General Manager of the Sydney County Council*, Sydney: Sydney County Council, 1947.

Cahill, J.J., Secretary for Public Works, "Electricity Commission Bill," Legislative Assembly, *Hansard*. 12 April 1950

Craggs, C.J., *Report of the General Manager of the Sydney County Council*, Sydney: Sydney County Council, 1951.

Cramer, J.O., *Board Minutes Sydney County Council*, Sydney: 1949.

Egan, Michael, *A Plan for a Secure New South Wales: A Discussion Paper Prepared by the Treasurer and Minister for Energy, Michael Egan, Mlc for Distribution to Pacific Power and Electricity Unions at the Consultative Meeting May 22 1997*, Sydney: New South Wales Treasury,

———, *Electricity Reform Statement*, Sydney: NSW Electricity Reform Taskforce, 1995.

Electricity Authority of New South Wales, *Minutes of Meeting*, State Records NSW, 1946 -1979.

"Electricity Generation [Nsw]." NSW Department of Trade and Investment, http://www.energy.nsw.gov.au/electricity/generation#Major-existing-NSW-power-stations. (Accessed 28 September 2014)

Hilmer, Frederick, G. "Review of the Structure of Electricity Generation in New South Wales: Report of the Generation Reform Working Group." NSW Treasury Office of Financial Management, http://www.treasury.nsw.gov.au/etf/etf95_8. (Accessed 11 June 2010)

McDonell, G. J., *Commission of Inquiry into Electricity Generation Planning in N.S.W*, Sydney: 1986.

———, *Report One: Annexures Planning, Economy, Flexibility Options through the Mid 1980s.*, 1, Sydney: NSW Government Publishing Service, 1986.

———, *Report One: Planning, Economy, Flexibility Options through the Mid 1980s.*, 1, Sydney: NSW Government Publishing Service, 1986.

"Mr John Joseph Cahill (1891 - 1959)." Parliament of New South Wales, Former Members, http://www.parliament.nsw.gov.au/prod/parlment/members.nsf/1fb6ebed995667c2ca256ea100825164/11f4aa1975e3b258ca256cb7007d0180?OpenDocument. (Accessed 29 August 2014)

New South Wales, *Cabinet Meeting Minutes, 2 May 1949*, Sydney:

———, *Parliamentary Debates*, Sydney: A H Pettifer. Govt. Printer, 1948-1950.

New South Wales Government Railway Electrical Branch, *Annual Report Ending 31 December 1937*, State Records NSW, 1937.

Nolan, D.J., *Report of the General Manager of the Sydney County Council*, Sydney: Sydney County Council, 1945.

Public Accounts Committee, *Report No. 37 of the Public Accounts Committee Entitled "Ravensworth Coal Washery."*, Sydney: Government Printer, 1987.

Report of the Department of Public Works, Sydney: 1912 - 1950.

Report of the Department of Public Works for the Year Ended 30th June 1942, Sydney: Department of Public Works, 1942.

Report of the General Manager of the Sydney County Council, Sydney: 1936 - 1953.

Report of the Municipal Council of Sydney, Sydney: 1904 - 1935.

Review of Pacific Power's Electricity Trading Activities, 6, Sydney: Audit Office of New South Wales, 2000.

State Records Authority of New South Wales. "Access Regulations." State Records Authority of New South Wales, http://www.records.nsw.gov.au/recordkeeping/topics/access-regulation/access-regulation. (Accessed 29 July 2013)

———. "Electricity Advisory Committee." http://investigator.records.nsw.gov.au/Entity.aspx?Path=\Agency\490. (Accessed 5 March 2010)

———. "Pacific Power - Access Direction # 347." http://www.records.nsw.gov.au/archives/pacific_power_3034.asp. (Accessed 7 July 2008)

Storey, R.T.C., and J.M. Caldwell, *Statement of Views on Proposal of the State Government to Create a Commission for the Control of Generation of Electricity Supply.*, Sydney: Local Government and Shires Associations of N.S.W., 1950.

"What Do We Do?". Independent Pricing and Regulatory Tribunal of New South Wales, http://www.archive.ipart.nsw.gov.au/. (Accessed 11 June 2010)

Commonwealth of Australia

"Australian Historical Population Statistics." Australian Bureau of Statistics, www.abs.gov.au/ausstats/abs@.nsf/mf/3105.0.65.001. (Accessed 1 December 2008)

"The Australian Loan Council." Department of the Parliamentary Library, http://www.aph.gov.au/binaries/library/pubs/rn/2001-02/02rn43.pdf. (Accessed 3 November 2012)

Cabinet Minute - Decision 195, Canberra: 1971.

Electric Power Generation and Distribution, Australian Bureau of Statistics, Canberra: Australian Bureau of Statistics, 1953.

Energy Generation and Distribution, Industry Commission, 1: Summary and Recommendations, Canberra: Commonwealth of Australia, 1991.

Fry, Geoffrey K. *The Politics of the Thatcher Revolution an Interpretation of British Politics 1979 - 1990*. Basingstoke: Palgrave Macmillan, 2008. Secondary. http://0-www.palgraveconnect.com.library.newcastle.edu.au/doifinder/10.1057/9780230594111. (Accessed 14 February 2012)

"How Are Electricity Prices Set in Australia?". Reserve Bank of Australia, http://www.rba.gov.au/foi/disclosure-log/pdf/101115.pdf. (Accessed 28 April 2012)

Pierce, J, D Price, and D Rose. "The Performance of the N.S.W. Electricity Supply Industry." In *Productivity and Growth*: Reserve Bank of Australia, 1995.

"Privatisation in Australia." Reserve Bank of Australia, http://www.rba.gov.au/publications/bulletin/1997/dec/pdf/bu-1297-2.pdf. (Accessed 3 February 2012)

Pusey, Michael. "An Australian Story: The Troubling Experience of Economic Reform." Department of the Senate http://encore.newcastle.edu.au/iii/encore/record/C__Rb3402220__San%20australian%20story%3A%20the%20troubling__Orightresult__U__X6?lang=eng&suite=cobalt. (Accessed 12 September 2014)

Rann, Ann. "Electricity Industry Restructuring - a Chronology." Department of the Parliamentary Library, http://www.aph.gov.au/About_Parliament/Parliamentary_Departments/Parliamentary_Library/Publications_Archive/Background_Papers/bp9798/98bp21. (Accessed 29 January 2014)

Heritage

"Culture and Heritage." New South Wales Office of Environment & Heritage, http://www.environment.nsw.gov.au/cultureandheritage.htm. (Accessed 30 June 2015)

Design 5 Architects Pty Ltd. "White Bay Power Station: Conservation Management Plan. ." Sydney, 2011.

"Former Pyrmont Power Station Administration Building." New South Wales Office of Environment6 & Heritage, http://www.environment.nsw.gov.au/heritageapp/ViewHeritageItemDetails.aspx?ID=2424796. (Accessed 20 January 2015)

Godden, Don. "The Significance of White Bay and Balmain Power Stations to Sydney's Industrial Heritage: A Report to the Electricity Commission of Nsw. ." Sydney, 1989.

Godden, Don, and Associates. "Penrith Power Station: History, Operation and Significance: A Report for the Museum of Fire and Penrith City Council." Sydney: Museum of Fire and Penrith City Council, 1986.

Heritage Act 1977 No 136.

"What Is Engineering Heritage." Engineers Australia, http://www.engineersaustralia.org.au/engineering-heritage-australia/about-us#What%20Is. (Accessed 17 June 2015)

Books, Articles and Unpublished Manuscripts

Abbreviations, Documentations and Terms Used with Generation. edited by Training and Development Sydney: Pacific Power, nd.

Aftergood, Steven. "Openness and Secrecy: The Pendulum Swings." http://www.fas.org/faspir/v53n1.htm. (Accessed 16 December 2014)

Aitken, Hugh G. J., review of *The Development of Large Technical Systems, by* Thomas P. Hughes and Renate Mayntz History of Science Society, 8. no. 3 (1990).

Alder, Keith. *Australia's Uranium Opportunities*. Sydney: Pauline Alder, 1996.

Alexander, John. "Behind Wran's Power Play." *Australian Business* (21 January 1982: 22-23.

Allbut, Guy. *A Brief History of Some of the Features of Public Electricity Supply in Australia: And the Formation and Development of the Electricity Supply Association of Australia, 1918-1957*. Melbourne: Electricity Supply Association of Australia, 1958.

Anderson, Gordon F. *Fifty Years of Electricity Supply*. Sydney: Sydney County Council, 1955.

Australia. Steering Committee on National Performance Monitoring of Government Trading Enterprises., and Australia. Industry Commission. *Government Trading Enterprises Performance Indicators 1987-88 to 1991-92*. Belconnen, ACT: Industry Commission, 1993.

Australian Coal Association. *Coal for the Eighties*. Sydney: Australian Coal Association, 1982.

Ayres, Robert U., Leslie W. Ayres, and Vladimir Pokrovsky. "On the Efficiency of Us Electricity Usage since 1900." *Energy* 30, no. 7 (2005): 1092-145.

Beatty, B. "Frank Brady: Those Ten Turbulent Years." *Australian Electrical World* 53, no. 14 (March 1988 1988): 13-14, 17.

Beatty, B. "Frank Brady. The First 30 Years - a Race with Demand." *Australian Electrical World* 53, no. 13 (February 1988 1988): 11, 13,16.

Binnie, Anna-Eugenia. "From Atomic Energy to Nuclear Science: A History of the Australian Atomic Energy Commission." Secondary, Macquarie University, 2003.

Birch, Charles, and Tresna Tunbridge. "Powercor Australia Limited V. Pacific Power - the Case and Its Implications for Organisations Engaged in Energy Trading." *Australian Mining & Petroleum Law Journal* 19, no. 2 (2000): 121-27.

Blainey, Geoffrey. *Black Kettle and Full Moon: Daily Life in a Vanished Australia*. Camberwell., Victoria: Penguin/Viking, 2003.

Bland, F.A. "Administration of Electricity." *Institution of Engineers Australia* 6 (1934): 33-36.

Booth, Robert R. *Warring Tribes - the Story of Power Development in Australia*. Perth: Bardak Group, 2000.

Bowers, Brian. *A History of Electric Light & Power*. History of Technology Series. London: Peregrinus in association with the Science Museum, 1982.

Brady, Frank. "Electricity Supply in N.S.W. - the First Century and Beyond." Institution of Engineers Australia, Sydney Division, 1994.

Brain, V.J.F. "Presidential Address - Some Observations on Electricity Supply on the Australian Mainland." *Journal of the Institution of Engineers* 24, no. June (7 May 1952 1952): 123-28.

Cahill, D, and S Beder. "Regulating the Power Shift: The State, Capital and Electricity Privatisation in Australia." *Journal of Australian Political Economy* 55, no. June 2005 (2005).

Capling, Ann. *Australia and the Global Trade System: From Havana to Seattle*. Cambridge: Cambridge University Press, 2001.

Carr, Bob. "Carr's Column - Electricity Privatisation." http://bobcarrblog.wordpress.com/2010/08/31/the-financial-review-electricity-privatisation/. (Accessed 17 May 2012)

———. "Electricity Privatisation." http://bobcarrblog.wordpress.com/2010/12/15//electricity-privatisation/. (Accessed 20 December 2014)

Carter, H.G. "Electrical Development in New South Wales: Discussion by Sydney Division." *Journal of the Institution of Engineers* 11 (September 1939 1939).

Casazza, John A. *The Development of Electric Power Transmission: The Role Played by Technology, Institutions, and People*. Ieee Case Histories of Achievement in Science and Technology. New York: Institute of Electrical and Electronics Engineers, 1993.

Cawte, Alice. *Atomic Australia, 1944-1990*. Kensington, NSW: NSW Press, 1992.

Chick, Martin. *Electricity and Energy Policy in Britain, France and the United States since 1945*. Cheltenham, England: Edward Elgar, 2007.

Clune, David. "John Joseph (Joe) Cahill (1891 - 1959)." http://adb.anu.edu.au/biography/cahill-john-joseph-joe-9659. (Accessed 29 August 2014)

———. "1947." In *The People's Choice : Electoral Politics in Twentieth Century New South Wales 1930-1968*, edited by Michael Charles Hogan and David Clune. Sydney: Parliament of New South Wales ; University of Sydney, 2001.

———. "1950." In *The People's Choice : Electoral Politics in Twentieth Century New South Wales 1930-1968*, edited by Michael Charles Hogan and David Clune. 4 v. (xiv, 391 xiv, 493 xiv, 46 xiv, 65 p.). Sydney: Parliament of New South Wales ; University of Sydney, 2001.

———. "John Joseph Cahill." Chap. 16 In *The Premiers of New South Wales 1856-2005*, edited by David Clune, Turner, Ken. Sydney: The Federation Press, 2006.

Cochrane, Rob. *Power to the People: The Story of the National Grid*. Feltham: Newnes, 1985.

Commission of Audit. Inquiries, Special Reports *Focus on Reform 2: Report on the State's Finances*. Vol. 2, Sydney: New South Wales, Commission of Audit, 1988.

———. Inquiries, Special Reports *Focus on Reform: Report on the State's Finances*. Vol. Executive Summary, Sydney: New South Wales, Commission of Audit, 1988.

Committee of Inquiry into Electricity Generation and the Sharing of Power Resources in South-East Australia: Executive Summary. Canberra: Australian Government Publishing Service, 1981.

Conde, H. G. *The Organisation of the Electricity Commission of New South Wales and an Outline of Its Activities: A Talk to the Royal Institute of Public Administration (N.S.W. Regional Group) on May 3, 1956*. Sydney: Electricity Commission of New South Wales, 1956.

Corin, William. *Power Requirements and Resources of New South Wales*. edited by New South Wales. Department of Public Works Sydney: Sydney: F. Clark Printing House, 1915.

Coutard, Olivier. "The Evolving Forms of Governance of Large Technical Systems." In *The Governance of Large Technical Systems*, edited by Olivier Coutard. London ; New York: Routledge, 1999.

Dames & Moore., Hunter Valley Aluminium Pty Ltd., and Alumax of Australia. *Lochinvar Aluminium Smelter : Environmental Impact Statement*. Sydney: Hunter Valley Aluminium, 1980.

Dee, Moreen. *Friendship and Co-Operation: The 1976 Basic Treaty between Australia and Japan*. Canberra: Dept. of Foreign Affairs and Trade, 2006.

Dick, Howard W., University of Newcastle (N.S.W.). Dept. of Economics., and University of Newcastle (N.S.W.). Institute of Industrial Economics. *Power Subsidies to Aluminium Smelters in N.S.W.* Industry Economics Discussion Paper (Series). [Newcastle, N.S.W.]: Dept. of Economics and Institute of Industrial Economics, University of Newcastle, 1981.

Doring, C., and MJ Doring. *Wangi Power Station: An Account of the Construction, Commissioning and Operation of Wangi Power Station at Wangi Wangi, on Lake Macquarie, New South Wales, Together with an Assessment of Its Heritage Significance and Recommendations Concerning the Responsibilities of Its Owner under the New South Wales Heritage Act 1977*. Sydney: C and MJ Doring Pty Ltd, 1990.

———. *Vales Point a Power Station Heritage Study 1959 to 1989: An Account of the Construction, Commissioning and Operation of Vales Point 'a' Power Station at Vales Point, on Lake Macquarie, New South Wales, Together with an Assessment of Its Heritage Significance*. Sydney: C and MJ Doring Pty Ltd, 1992.

———. *Bunnerong Switch House Heritage Assessment: An Account of the History and a Description of the Swith House of the Former Bunnerong Power Station at Military Road, Matraville, in the City of Randwick Together with an Assessment of Its Heritage Significance*. Sydney: C and MJ Doring Pty Ltd, 1993.

Edwards, Cecil. *Brown Power : A Jubilee History of the State Electricity Commission of Victoria*. Melbourne: State Electricity Commission of Victoria, 1969.

Einstein, Albert. "Quote "the Significant Problems We Have ..."." http://www.quotationspage.com/quote/23588.html. (Accessed 14 February 2012)

Emerson, Arthur. *Historical Dictionary of Sydney*. Historical Dictionaries of Cities of the World;. Lanham, Md.: Scarecrow Press, 2001.

Energy Authority of New South Wales. *Electricity in New South Wales: New South Wales Energy Statistics*. Sydney: Energy Authority of N.S.W., 1982.

Evans, T.E. "The Corporatisation of a Bureaucracy: The State Electricity Commission of Victoria 1982 to 1992." Secondary, Monash, 2001.

Fetscher, Mark. *The Power Makers: The History of the Central Coast and Hunter Valley Power Generating Stations*. Charlestown, N.S.W.: M. Fetscher, 2001.

———. *The Power Stations of the N.S.W.G.R.* Rev. ed. Charlestown, N.S.W.: M Fetscher, 2003.

———. *The Power Stations of the Sydney County Council*. Charlestown, N.S.W.: M Fetscher, 2004.

———. *The Colliery Power Stations*. Charlestown, N.S.W.: M. Fetscher, 2008.

Flanagan, Paul. "Pacific Power." In *Effective Environmental Management: Principles and Case Studies*, edited by Rory Sullivan and Hugh Wyndham. xvii, 246 p. Crows Nest, N.S.W.: Allen & Unwin, 2001.

Geels, F. W. "The Dynamics of Transitions in Socio-Technical Systems: A Multi-Level Analysis of the Transition Pathway from Horse-Drawn Carriages to Automobiles (1860-1930)." *Technology Analysis & Strategic Management* 17, no. 4 (2005): 445 - 76.

Godden, Don, E Higginbotham, E Pinder, W Whittaker, and R Young. *The History and Technology of the Ultimo Power House Sydney: A Report for the Government Architects Branch, Public Works Department of New South Wales*. Sydney: NSW Department of Public Works, 1982.

Golding, Peter. *They Called Him Old Smoothie: John Joseph Cahill: A Belated Biography of a Rather Exceptional Politician*. North Melbourne, Vic.: Australian Scholarly Publishing, 2009.

Groom, E. "The Curran Report and the Role of the State." *Australian Journal of Public Administration* 49, no. 2 (1990): 144-54.

Hannah, Leslie. *Electricity before Nationalisation: A Study of the Development of the Electricity Supply Industry in Britain to 1948*. London: Macmillan, 1979.

———. *Engineers, Managers and Politicians - the First Fifteen Years of Nationalised Electricity Supply in Britain*. London: MacMillan, 1983.

Hardy, Frank. *Power without Glory*. St. Albans: Panther, 1975.

Hilmer, Frederick, G. "Chairman's Report." In *Pacific Power Annual Report - 1995*. Sydney: Pacific Power, 1995.

Hirsh, Richard F. *Technology and Transformation in the American Electric Utility Industry*. Cambridge [England] ; New York: Cambridge University Press, 1989.

———. *Power Loss: The Origins of Deregulation and Restructuring in the American Electric Utility System*. Cambridge, Mass.: MIT Press, 2000.

Hirst, John. *State Socialism*. The Oxford Companion to Australian History. edited by Graeme Davison, J. B. Hirst, Stuart Macintyre and Oxford Reference Online: Premium. Rev. ed. South Melbourne ; New York: Oxford University Press,, 2001.

Holmes, Andrew. *Privatising British Electricity: Restructuring and Resistance*. London: Financial Times Business Information, 1992.

Hughes, Thomas Parke. "The Electrification of America: The System Builders." *Technology and Culture* 20, no. 1 (1979): 124-61.

———. *Networks of Power - Electrification in Western Society, 1880-1930*. Baltimore: Johns Hopkins University Press, 1983.

———. "The Seamless Web: Technology, Science, Etcetera, Etcetera." *Social Studies of Science* 16, no. 2 (1986): 281-92.

Jobson, S. "Power for the People: A History of Electricity in Sydney" (Unpublished Work), 2004.

Joerges, Bernwood. "Large Technical Systems: Concepts and Ideas." In *The Development of Large Technical Systems*, edited by Renate Mayntz and Thomas Hughes Boulder: Westview Press, 1988. http://ezproxy.newcastle.edu.au/login?url=http://hdl.handle.net/2027/heb.01147.0001.001. (9 July 2015)

Josephson, Paul R. ""Projects of the Century" in Soviet History: Large Scale Technologies from Lenin to Gorbachev." *Technology and Culture* 36, no. 3 (1995): 519-59.

Kellow, Aynsley J. *Transforming Power: The Politics of Electricity Planning*. Cambridge, UK ; New York: Cambridge University Press, 1996.

Kolsen, H. M. "The Economics of Electricity Pricing in N.S.W." *Economic Record* 42, no. 100 (1966): 555-71.

Kranzberg, Melvin. "Technology and History: "Kranzberg's Laws"." *Technology and Culture* 27, no. 3 (1986): 544-60.

Landa, Paul (Minister for Energy and Water Resources), Letter to J.W. McBean (Assistant Secretary Labor Council of New South Wales), 2 April 1982

Law, John, and Wiebe E. Bijker. "Do Technologies Have Trajectories: Introduction." In *Shaping Technology/Building Society: Studies in Sociotechnical Change*, edited by John Law and Wiebe E. Bijker. vii, 341 p. Cambridge, Mass.: MIT Press, 1992.

Lee, David. "The 1949 Federal Election: A Reinterpretation." *Australian Journal of Political Science* 29, no. 3 (November 1994 1994): 501-19.

Lewis, David. "Statutory Authorities and Constitutional Conventions - the Case of the Reserve Bank of Australia." *Melbourne University Law Review* 16, no. 2 (1987-1988): 348-81.

Lipartito, Kenneth, review of *The Development of Large Technical Systems, by* Thomas P. Hughes and Renate Mayntz, Journal of Economic History, 50. no. 1 (1990).

Lobsey, Ian R. *City of Light: A History of the Tamworth Electricity Undertaking and Peel-Cunningham County Council 1888-1988*. Tamworth [N.S.W.]: Peel-Cunningham County Council, 1988.

London Economics Limited. *Measuring the Efficiency of the Australian Electricity Supply Industry*. Sydney: Electrical Supply Association of Australia Limited, 1993.

Loundes, Joanne. "A Brief Overview of Unemployment in Australia." Melbourne Institue of Applied Economic and Social Research, http://www.melbourneinstitute.com/wp/wp1997n24.pdf. (Accessed 18 June 2009)

Luk, Chun Yu Catherine. "Generating Change: Corporatisaion and Strategic Human Resource Management in Pacific Power." Secondary, University of New South Wales, 1996.

Martin, Brendan, and Public Services International. *In the Public Interest? - Privatization and Public Sector Reform*. London Atlantic Highlands, N.J.: Zed Books in association with Public Services International, 1993.

McColl, G. D. *The Economics of Electricity Supply in Australia*. Carlton, Vic.: Melbourne University Press, 1976.

———. "Economic Issues Facing Electricity Supply Authorities." *Australian Economic Review*, no. 72 (4th Quarter 1985 1985): 28.

McDonell, G. J. "Power Supply, Energy Markets and National Coordination: A Critique." *Australian Quarterly* 61, no. 1 (1989): 4-16.

———. "N.S.W. Government Ownership and Risk Management in a Mandatory Pool - 'Neither Fish nor Fowl Nor ...'." In *Power Progress: An Audit of Australia's Electricity Reform Experiment*, edited by Graeme Arthur Hodge, Valarie Sands, David Hayward and David Scott. Melbourne: Australian Scholarly Publishing, 2004.

McEniery, Martin. "Powercor Australia V Pacific Power." Gardens Lawyers, www.gadens.com.au/Publications-View.aspx?documentid=373. (Accessed 21 February 2011)

McMahon, Tim. "Historical Cpi-U Data from 1913 to the Present." http://inflationdata.com/inflation/Consumer_Price_Index/HistoricalCPI.aspx?reloaded=true. (Accessed 30 March 2013)

McQueen, Humphrey. *Gone Tomorrow: Australia in the 80s*. London ; Sydney: Angus & Robertson, 1982.

Mellor, D. P. *The Role of Science and Industry*. Australia in the War of 1939-1945. Series 4, Civil. Canberra: Australian War Memorial, 1958.

Meredith, David, and Barrie Dyster. *Australia in the Global Economy: Continuity and Change*. New York: Cambridge University Press, 1999.

Monstadt, Jochen, and Matthias Naumann. "New Geographies of Infrastructure Systems: Spatial Science Perspectives and the Socio-Technical Change of Energy and Water Supply Systems in Germany." In, *Network - papers* 10, (2003). https://books.google.com.au/books?id=n6tMVuRNFNEC&printsec=frontcover#v=onepage&q&f=false. (18 June 2015)

Moore, Tod, and James Walter. "State Socialism in Australian Political Thought: A Reconsideration." *Australian Journal of Politics & History* 52, no. 1 (2006): 13-29.

Moyal, A.M. "The Australian Atomic Energy Commission: A Case Study in Australian Science and Government." *Search* 6, no. 9 (September 1975 1975).

"National Electricity Market: A Case Study in Successful Microeconomic Reform." KPMG, http://www.kpmg.com/AU/en/IssuesAndInsights/ArticlesPublications/Documents/national-electricity-market-successful-microeconomic-reform-2013.pdf. (Accessed 4 May 2014)

New South Wales. Dept. of Environment and Planning. *Proposed Tomago Aluminium Smelter: Environmental Impact Assessment*. Sydney: Govt. Printer, 1981.

Newbery, D. "Electricity Liberalisation in Britain: The Quest for a Satisfactory Wholesale Market Design." *Energy Journal* 26, no. European Electricity Liberalisation (2005).

Newman, M. E. J. *Networks: An Introduction*. Oxford ; New York: Oxford University Press, 2010.

Niall, Jane, Rhonda Smith, and Peter Wilson. "The Economic Impact of Electricity Shortages." *Australian Economic Review*, no. 58 (2nd Quarter 1982 1982): 62-76.

Nye, David E. *Image Worlds: Corporate Identities at General Electric, 1890-1930*. Cambridge, Mass.: MIT Press, 1985.

———. *Consuming Power: A Social History of American Energies*. Cambridge, Mass. ; London: MIT, 1999.

———. "History of Electricity Use." In *Encyclopedia of Energy*, edited by Cutler J. Cleveland. 177-90. New York: Elsevier, 2004.

Oliver, Pam. "Interpreting Japanese Activities in Australia, 1888-1945." https://www.awm.gov.au/journal/j36/oliver.asp. (Accessed 25 December 2014)

Paddison, L. I. *Railways of New South Wales 1855-1955*. Sydney: Department of Railways, 1955.

Parsons, R. H. *The Early Days of the Power Station Industry*. Cambridge Eng.: The Universiy Press, 1939.

Petrow, Stefan. "Municipalisation in Australia: The Case of Launceston 1880-1914." *Australian Journal of Politics and History* 56, no. 4 (2010): 521-39.

Platt, Harold L. *The Electric City: Energy and the Growth of the Chicago Area, 1880-1930*. Chicago: University of Chicago Press, 1991.

"Powercor Aust. Ltd. V Pacific Power." In *VSC 110 (1999)*, edited by Supreme Court of Victoria (Commercial Jurisdiction). Melbourne: Supreme Court of Victoria (Commercial Jurisdiction), 1999.

Preston, Brian J. "Environmental Law 1927-2007: Retrospect and Prospect." *Australian Law Journal* 81, no. 8 (2007): 616-37.

Pusey, Michael. *Economic Rationalism in Canberra : A Nation-Building State Changes Its Mind*. Cambridge, England ; Melbourne: Cambridge University Press, 1991.

Pusey, Michael, Shaun Wilson, Nick Turnbull, Toby Fatorre, and Ebooks Corporation. *The Experience of Middle Australia : The Dark Side of Economic Reform*. Cambridge: Cambridge University Press, 2003.

Reilly, Helen. *Connecting the Country : New Zealand's National Grid 1886-2007*. Wellington, N.Z.: Steele Roberts, 2008.

Rendel, Palmer & Tritton., New South Wales. Dept. of Works and Local Government., and Vattenbyggnadsbyrån. Inquiries, Special Reports *Report on Electrical Development in New South Wales*. New South Wales: NSW Government Printer, 1937.

Report on the Interchange of Electricity between the State Electricity Commission of Victoria and the Electricity Commission of New South Wales, Production Co-ordination Branch, Melbourne: State Electricity Commission of Victoria, 1964.

Rix, Stephen, and Michael R. Johnson. *Powering the Future : The Electricity Industry and Australia's Energy Future*. Sydney: Pluto Press Australia in association with the Public Sector Research Centre, University of New South Wales, 1991.

Rosenthal, Stephen, and Peter Russ. *The Politics of Power - inside Australia's Electric Utilities*. Melbourne: Melbourne University Press, 1988.

Rourke, Francis E. "Administrative Secrecy: A Comparative Perspective." *Public Administration Review* 35, no. 1 (1975): 1-2.

Rowat, Donald C. "The Problem of Administrative Secrecy." *International Review of Administrative Sciences* 32, no. 2 (1966): 99-106.

Seely, Bruce Edsall. "Historical Patterns in the Scholarship of Technology Transfer." *Comparative Technology Transfer and Society* 1, no. 1 (2003): 7-48.

Sharma, Deepak. "The Multidimensionality of Electricity Reform--an Australian Perspective." *Energy Policy* 31, no. 11 (2003): 1093-102.

Shedden, K.R. *Pioneering Hydro-Electric Development in Australia : Notes on the Life and Work of William Corin*. Taree: The Author, 1963.

Sioshansi, Fereidoon, and W. Pfaffenberger. "Why Restructure Electricity?". Chap. 1 In *Electricity Market Reform : An International Perspective*, edited by Fereidoon Sioshansi and W. Pfaffenberger. xxix, 656 p. Amsterdam: Elsevier, 2007.

Smith, Rodney, Ariadne Vromen, and Ian Cook. "Keywords in Australian Politics." Cambridge University Press, http://0-www.newcastle.eblib.com.library.newcastle.edu.au/EBLWeb/patron?target=patron&extendedid=P_268202_0. (Accessed 29 August 2011)

Spearritt, Peter. *Sydney's Century : A History*. Sydney, Australia: UNSW Press, 2000.

Spicer, Barry, Robert Bowman, David Emanuel, Alister Hunt, Michael Bradbury, Darien Kerkin, and Paul Rouse. *The Power to Manage : Restructuring the New Zealand Electricity Department as a State-Owned Enterprise : The Electricorp Experience*. Auckland, N.Z.: Oxford University Press, 1991.

Stace, Doug, and Dexter C. Dunphy. *Beyond the Boundaries : Leading and Re-Creating the Successful Enterprise*. Sydney: McGraw-Hill, 1994.

Starr, Chauncey, and Richard Rudman. "Parameters of Technological Growth." *Science* 182, no. 4110 (1973): 358-64.

Steger, Manfred B., and Ravi K Roy. *Neoliberalism*. Oxford: OUP, 2010.

Stewart Howard and Associates. *The Power Crisis in Australia, 1951*. Sydney: Stewart Howard and Associates Pty. Ltd., 1951.

Strachan, G.L. "The Privatisation Scam." http://bwb.com.au/gwb/news/economic/250298.html. (Accessed 20 January 2010)

Sykes, F. "Development of the Electrical Supply System and the Future of Nuclear Power in New South Wales." *Journal of the Institution of Engineers Australia* 32, no. July-August (1960).

Tait's Electrical Directory of Australia and New Zealand: The Electrical Handbook. Melbourne: Tait Publishing Company, 1948.

Thomis, Malcolm I., and Queensland Electricity Commission. *A History of the Electricity Supply Industry in Queensland. Volume I, 1888-1938*. Brisbane: Boolarong Publications for Queensland Electricity Commission, 1987.

———. *A History of the Electricity Supply Industry in Queensland. Volume Ii, 1938-1988*. Brisbane: Boolarong Publications for Queensland Electricity Commission, 1990.

Tosh, John. *The Pursuit of History : Aims, Methods, and New Directions in the Study of Modern History*. 5th ed. New York: Pearson Longman, 2010.

Trimmer, P.E. "The Identification of Decision Processes Utilised in the Establishment of a Competitive Electricity Market in New South Wales and Nationally." Secondary, Master of Engineering Management thesis, University of Technology, 1996.

Turton, Hal. "The Aluminium Smelting Industry: Structure, Market Power, Subsidies and Greenhouse Gas Emissions " The Australia Institute, http://www.tai.org.au/documents/dp_fulltext/DP44.pdf. (Accessed 6 September 2014)

Vallance, Sarah. "Conde, Harold Graydon (1898 - 1959)." Australian National University, http://adb.anu.edu.au/biography/conde-harold-graydon-9801. (Accessed 4 June 2008)

von Meier, Alexandra. *Electric Power Systems: A Conceptual Introduction*. Hoboken, N.J.: John Wiley & sons, 2006.

Walker, Meredith, Peter Marquis-Kyle, Australia/ICOMOS., and National Estate Grants Program (Australia). *The Illustrated Burra Charter: Good Practice for Heritage Places*. Exp. and updated ed. Burwood, Vic.: Australia ICOMOS, 2004.

"Wem [Wholesale Electricity Market] Structure." Independent Market Operator, http://www.imowa.com.au/electricity-and-gas-services/market-structure. (Accessed 12 October 2014)

Wilenski, Peter. *Directions for Change: An Interim Report*. Review of New South Wales Government Administration.,. [Sydney]: Govt. Pr., 1977.

Wilkenfeld, George. "The Electrification of the Sydney Energy System, 1881-1986." Secondary, Macquarie University, 1989.

Wilkenfeld, George, and Peter Spearritt. *Electrifying Sydney - 100 Years of Energy Australia*. [Sydney]: EnergyAustralia, 2004.

Yeh, Sonia, and Edward S. Rubin. "A Centurial History of Technological Change and Learning Curves for Pulverized Coal-Fired Utility Boilers." *Energy* 32, no. 10 (2007): 1996-2005.

Newspapers and Periodicals

Dates refer to the years consulted and not necessarily the full period of publication.

Australian Financial Review	1992 – 1999
Australian Business	1982
Australian Women's Weekly	1937
Canberra Times	1950 -1952
Daily Telegraph	1999
Network (ECNSW)	1958 - 2003
Newcastle Herald	2006
Newcastle Morning Herald	1950
Sydney Morning Herald	1940 – 2014